A New Type of AC Motor △ /Y Transform Economizer

Yulan Qi

Wuhan Textile University, Wuhan, China

429683139@qq.com

Keywords: AC motor; Economizer; Single chip microcomputer; Solid state relay

Abstract. Analysis of the three-phase AC motor when used in specific ways. Put forward with the STC89C52 chip as the core, the use of enhanced the advantage of solid state relay, achieve non-contact △ /Y transformation. The whole circuit is simple and compact, installation, maintenance, and use is very convenient, stable performance and costs are relatively cheap.

Introduction

Three-phase AC motor when making the sale of the three-phase winding head and tail are reserved for the user. Users can connect into △ or Y connection according to need. The motor in the process of starting or running often require mutual transformation between △ and Y connection. Previous ac motor when connection mode transformation is done with two ac contactor. One by one into a △ type, one by one into a Y shape. AC contactor and auxiliary contact of the main contact is a mechanical contact. This mechanical life and reliability problems. In this paper, the use of microcontroller STC89C52 and solid state relay to realize non-contact △ /Y transform, make the circuit more simple and practical, and has the characteristics of energy saving.

The Hardware Design

The Main Circuit. Main circuit is shown in Fig. 1, three SSR1 Y connection switch, solid state relay for motor three SRR2 solid state relay as a delta connection switch. These switches are controlled by single chip microcomputer.

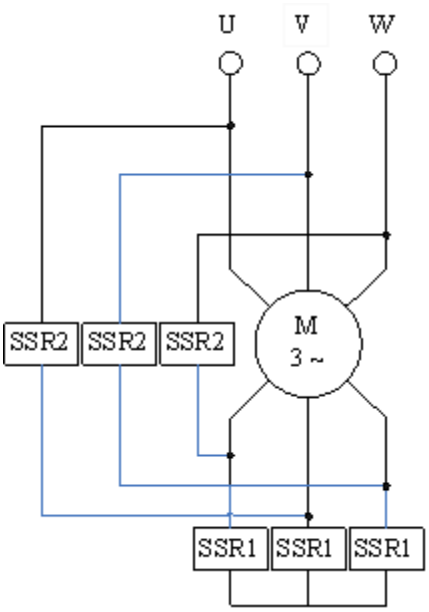

Figure 1. The main circuit

Detection Circuit. Motor running connection mode is determined by the current detection circuit according to the load size. Fig. 2 is a current detection circuit, LH for current transformer, D1 is a bridge rectifier, T1 is the switching transistor, choose 3 DK4 models. For different capacity

motor, adjustable potentiometer W according to load condition, the transistor T1 conduction or deadline. When conducting the low level into the single chip microcomputer, as with the high level into the single chip microcomputer.

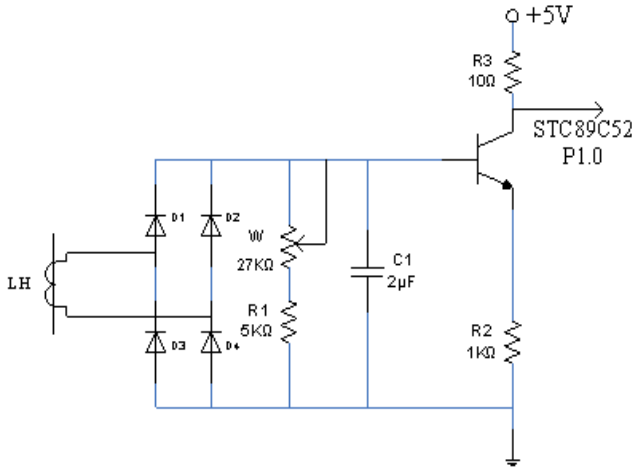

Figure 2. The current detection circuit diagram

Control Circuit. The main control loop SSR1 and SSR2 solid state relay switch controlled by STC89C52 single-chip microcomputer, circuit is shown in Fig. 3 Receiving signal detection current SCM P1.0 foot, microcontroller based on solid state relay switch signal control, make the motor in heavy load when the T2 cutoff transistor, SSR2 conduction motor in delta connection state run form; Deadlines, SSR1 T3 when light load transistor conduction make motor running under state Y connection. T2 and T3 choose 3DK4 models.

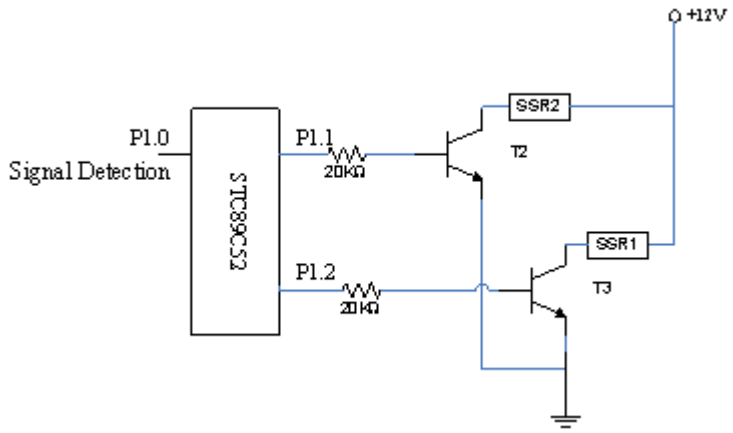

Figure 3. Control Trigger Circuit Diagram

Solid State Relay. Solid state relay is semiconductor device instead of traditional electric contact as switching device with relay characteristics of contactless switching device, as shown in Fig. 4, it is a kind of active four terminal device, of which two ends for the input side, the other two end for the output controlled end, to realize electrical isolation between the input and output, the device adopts the high pressure of special photoelectric coupler. When the input plus dc or pulse signal to a certain value, the output end can shift from off state to state. Because the solid state relay is composed of solid element non-contact switch components, so it is compared with the electromagnetic relay, has reliable operation, long life, small to outside interference, compatible with logic circuit, strong anti-jamming capability, switch speed is quick, usage is convenient wait for a series of advantages. SSR solid state relay as compared with the traditional electromagnetic relay has incomparable superiority.

SSR solid state relay to trigger a form can be divided into zero pressure type (Z) and phase

modulation type (P) two kinds. IN the control signal is input on the right, the P type SSR conduction immediately. After the revocation IN, when load current is lower than the bidirectional thyristor to maintain current (ac commutator), SSR shut off. Z SSR internal including zero crossing detection circuit, when the input signal is added IN, only when the load voltage reaches zero, SSR to conduction, and may cause the power the maximum delay of half cycle. With P type Z SSR shut off condition, but due to work load current approximate sine wave, high order harmonic interference is small, so widely used. Therefore, this device choice enhanced solid state relay the HS series, the series than ordinary SSR reversing dv/dt index increased 5 ~ 20 times. With two high-power one-way thyristor parallel, Change the current distribution and thermal conditions, improved the SSR output power. Enhanced SSR in high power applications, both the perceptual load and resistance load, resistance to voltage and current shock and reliability of products, more than ordinary solid state relay.

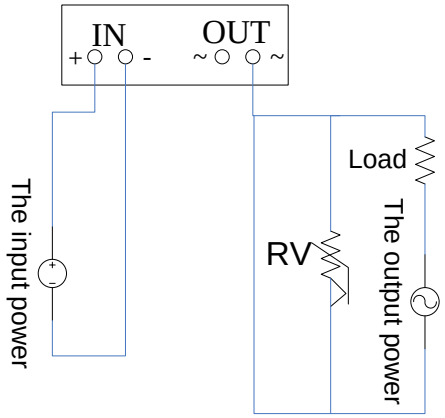

Figure 4. Solid State Relay

The Software Design

The main program flow chart as shown in Fig. 4, the main program to realize the main functions: Program using assembly language preparation, program block diagram as shown in Fig. 5, the asynchronous motor starting to delta connection mode, after starting time delay, such as single chip microcomputer to detect signal judgment, according to the high and low level signal to control the △/Y transform running state.

Assemble program:

```
ORG 000H
SJMP MAIN
ORG 0030H
MAIN: SETB P1.0
MOV P1, #0FFH
CLR R5
MOV R5, #64H
```

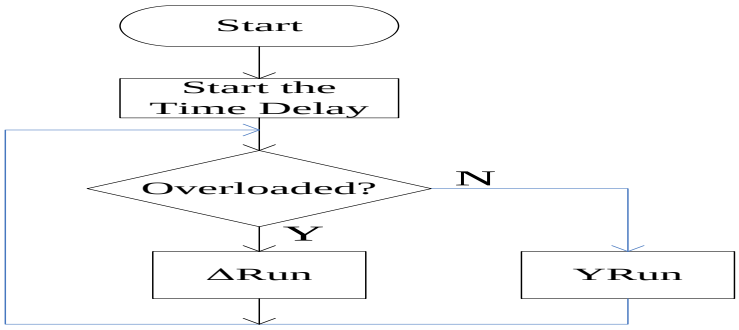

Figure 5. The process diagram

Conclusion

The circuit is suitable for intermittent load of asynchronous motor, such as crankshaft lathe, punch press, shears equipment especially kowtow pump on oil field pumping units. This △/Y transform the use of economizer conditions as follows: when the asynchronous motor load can reverse connection when reduced to 40% of the rated load (is the△of by into Y). Order to achieve the goal of energy saving.

References

[1] Peng Hongcai BianChun Yuan. Motor principle and drag. 3rd edition, mechanical industry publishing house, 2016

[2] He Chao mechanical and electrical automatic control system [M] China renmin university press, 2001

[3] XiaoXueYao motor drive and speed regulation, chemical industry press, 2015

[4] Deng Xingzhong mechanical and electrical drive control [M], wuhan: huazhong university of science and technology press, 2001

[5] Wang motor single-chip microcomputer control [M] Beijing: Beijing university of aeronautics and astronautics press, 2002.

[6] Guo-hua yan, three-phase asynchronous motor quick economic operation table, 2010

[7] Zhen-min wang, on the surface of the three-phase asynchronous electric braking. Mechanical industry press, 2009

[8] Zhao-you zhu, 23, haitao, single-chip microcomputer principle and application, based on STC series enhanced 80 c51. 3rd edition, the electronic industrial press, 2016

[9] Wen-guang luo, Liu Yingbei. Asynchronous motor load size buck energy-saving research, electrical technology, 1998 (8)

[10] Electric machines and power systems. Washington, D.C.: Hemisphere Pub.Corp.2013

[11] Journal of microelectromechanical systems, Institute of Electrical and Electronics Engineers, 2012