A New Type of Automatic Opening and Closing Light-Operated Curtain

Biqing Li[1, a], Hongyan Zhang[1, a], Congjun Yang[1, a *], Shiyong Zheng[2, b]

[1]College of Mechanical and Electronic Engineering, Hezhou University, Hezhou Guangxi 542899, China

[2]College of Computer Science and Information Engineering, Hezhou University, Hezhou Guangxi 542899, China

[a]janliful@163.com, [b]229292710@qq.com

Keywords: SCM, OLED, light intensity, infrared remote control.

Abstract. The automatic opening and closing light-operated curtain device designed in this paper applies the photosensitive resistance to collect current light intensity, then transforms the collected analog signal to digital signal by a serial A/D chip TLC549, and finally the converted data is transmitted to main control chip STC89C54RD+ SCM to be analyzed and handled. After the data processing, the main control chip displays the processing results by OLED liquid crystal display. At the same time, it compares the data with set light intensity, thereby controlling corresponding actions of stepper motor , and further controlling the opening and closing of curtain. The device can control the opening and closing of curtain by the infrared remote control, button and time clock.

1. Overall design

With the continuous improvement of electronic control technology and continuous decline of cost, a variety of intelligent curtain control systems with household appliances as an example emerges as the times require and has achieved a broad market, such as the light-operated, acoustic control, remote control and temperature control. Compared with the traditional hand drawn curtain, this design increases functions of timing and remote control opening and closing, such as office buildings, conference rooms, exhibition halls and other places.

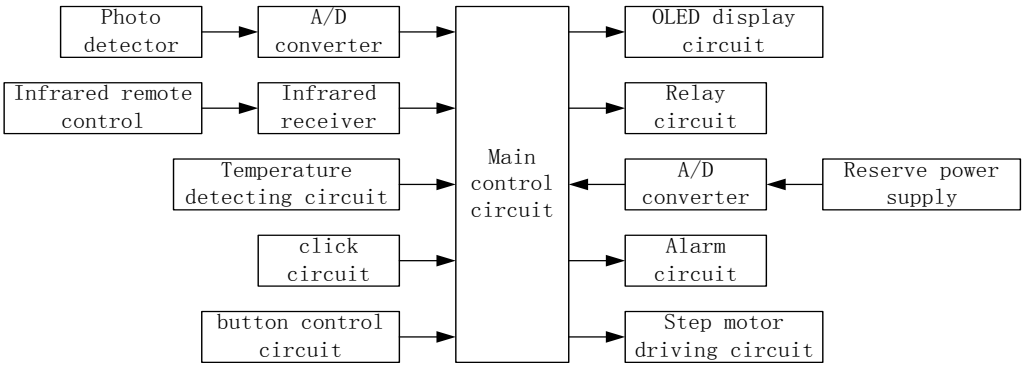

Figure 1. Block diagram of the overall design

The block diagram of the system is shown in figure 1.The described system in this paper can realize automatic adjustment of light intensity, manual adjustment by button press, infrared remote control adjustment, automatic adjustment by time setting for the opening degree of curtain. Analog digital chip TLC549 collects the voltage of the photosensitive resistance and converts it to digital signal and then transfers to SCM processing, signal sent by the infrared remote control is received by the HS0038 receiver and is sent to SCM to process, DS18B20 transmits the real-time temperature data to the SCM, DS1302 provides real-time clock to the SCM. The SCM scans the independent buttons and SCM interface through the way of bit scanning, and processes the collected data. SCM comprehensively treatments the data collected from the external I/O interface and displays on the OLED liquid crystal display. At the same time, it compares the processed data with the pre-processed

data, and controls the relay circuit, buzzer alarm circuit, stepper motor driver circuit, reserve power supply voltage detection and automatic charging circuit for the corresponding work.

In the system, a photosensitive resistance is used to connect the 5V circuit to response and collect the light. The voltage of photosensitive resistance is collect by the analog digital chip TLC549 and is, converted to digital quantity, which is handled by the master control circuit and compared with amount of presetting in the system program, then makes the appropriate action. The OLED liquid crystal display is applied to display real-time information of real-time clock, temperature, light intensity and the opening and closing state of curtain. In this design, the integrated infrared receiver head HS0038 is selected as receiver of the infrared signal, and the weak signal from the infrared remote control is amplified, and directly connected with the external interrupt pin of SCM.

2. System program flow

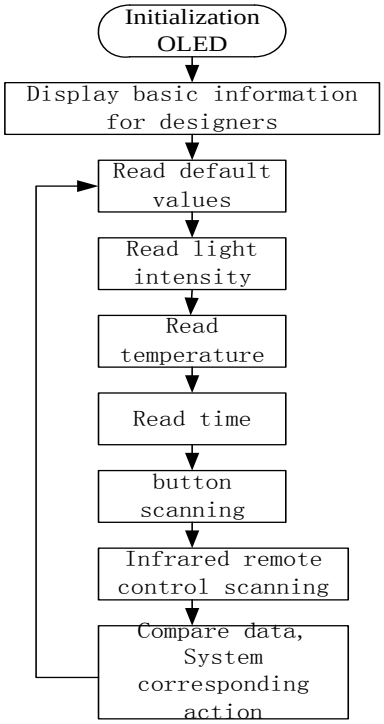

Figure 2. General flow chart of system program

General flow chart of system program is shown in figure 2. After the system is started, OLED is initialized first, then the basic information of the designer is displayed, and the light intensity reading, real time reading, ambient temperature reading, button scanning, infrared remote control signal scanning in turn, finally the program compares data collected in the program with the pre - set data in the system and makes the system to give corresponding control action according to the results of comparison, then carries on the next round of data acquisition.

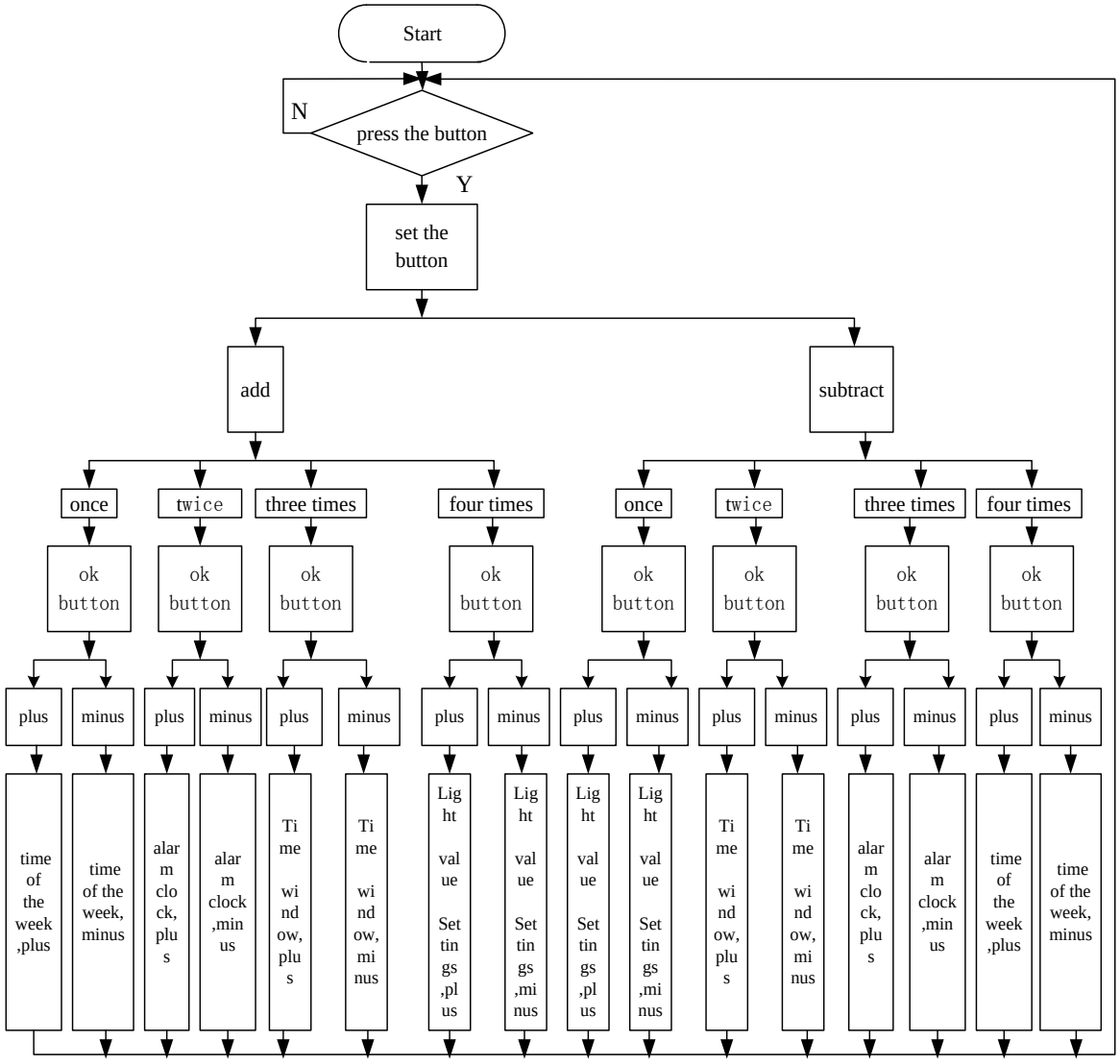

Figure 3. program flowchart of button scanning and infrared remote control button scanning

The program flowchart of button scanning and infrared remote control button scanning is shown in figure 3. Buttons are set in the procedures to adjust the system date and time, you can set the timing settings of timing window, set automatically open and close the curtains according to light intensity, as well as control the opening and closing of the curtain through the buttons. At the same time, it also provides the same function for some buttons of infrared remote control on with the hardware buttons.

3. Conclusion

This design can automatically adjust the opening degree of the curtain through the light intensity automatic adjustment, button manual adjustment, infrared remote control adjustment and time setting automatic adjustment. Compared with traditional hand drawn curtain, this design increase the functions of timing and remote control the opening and closing of curtain. It also has the advantages of high reliability, energy saving, low cost, environmental protection, small size.

Acknowledgements

This work is supported the following fund:

2016 The project of improving the basic ability of young teachers in Colleges and universities in Guangxi: “Design and development of electronic commerce platform of agricultural products based on Semantic Technology” (No, KY2016YB455).

Guangxi higher education teaching reform project: “The research and practice of the teaching reform of the course of signal processing and research” (No 2014JGB237).

2015 college students' innovative training program: “Research on the application of value added travel experience in the mobile terminal of the ‘ethnic custom travel’ in Guangxi” (No 201511838070); && “The design and development HeYuanTong Campus Mobile Phone APP based on Android” (No 201511838034).

2015 Teaching case project construction project of hezhou university: “Tourist positioning and guiding system project of Huangyao scenic”; && “Development and application of the information management system of ‘Huang Yao Tong’”.

Nanling corridor of ethnic culture research base of Open Fund Project: “Nanling National corridor costumes digital display design” (No 2015kf27);

Project of scientific research and technology development project of Hezhou: “Design and implementation of agricultural products e-commerce platform based on Semantic Technology” (No, Hekeneng 1506006)

Scientific research project of hezhou university: “The intelligent home system Implementation Research based on the Internet of Things technology” (No 2014YBZK10); “Research and development of E-government platform based on mobile terminal” (No 2015ZZZK03);

Reform in Education project of hezhou university: “Internet of things” (No hzxytszy201501); “Research on application personnel training model of Communications for SMEs” (No hzxyjg201525);

Master degree discipline construction scientific research and Cultivation Project: “Research on the social work service of the teenagers' Network Addiction” (No 2015SHGZ005) &&“Research on the intelligent development of rural tourism in Guangxi based on the Internet of things” (No 2015MTA16).

References

[1] Mohammad Rastegar, Mahmud Fotuhi-Firuzabad, Farrokh Aminifar. Load commitment in a smart home. Applied Energy. 2012

[2] Jon Dixon, J.B Fowler, Adrian Valenzuela.To Extend Battery Life, Use Two Processors (Not One). Electronic Component News.

[3] Liyanage C, De Silva, Chamin Morikawa. State of the art of smart homes. Engineering Applications of Artificial Intelligence. 2012

[4] KARIM YAGHMOUR, JON MASTERS, GILAD BEN-YOSSEF, PHILIPPE GERUM. Building Embedded Linux System. 2010