Clustering and Emergent Features of the Regional Economics of the Kemerovo Region

Bereznev Sergey V.[a], Kumaneeva Maria K.[b], Makin Maksim A.[c]
T. F. Gorbachev Kuzbass State Technical University
Kemerovo, Russian Federation
[a]kuznii@mail.ru, [b]mashakn@mail.ru, [c]kmk.fk@kuzstu.ru

***Abstract* — The subject matter of this research is the processes of clustering in the regional economics. Currently, clustering is the most efficient form of conducting the innovative activity. For industrial regions, such as the Kemerovo region, the benefits of clustering comprise the creation of an efficient production scale rise. The purpose of this article is to study the ways to create the integrated tools formations in the industrial region. In addition, clustering advantages are imposing a qualitatively new impetus onto the development of the economics as a result of a mutually beneficial relationship emerged between industry and research organizations, universities, innovative businesses and the public sector. The paper concludes that development in the region of several cluster formations can provide the effect of the emergence of functioning of the entire regional economics. The effect in question is caused by the fact that the sum of potentials of the individual elements of the regional economics is less than the total capacity of a cluster in which these elements interact with each other. This feature provides for a number of advantages of regional economies considered in this article. In addition, the authors have identified problems that have a negative impact on the development of the innovation sphere of an industrial region.**

***Keywords* — underground coal gasification; methane; mine; gas utilization; degasification; energy potential.**

I. INTRODUCTION

Currently, a mechanism that ensures a successful economic development acquires a sharp innovation context. Nowadays regions play a specific role in a new production industrialization which becomes an acute task of the day. The industrial production segment is a main driving force helping to fulfil those tasks, as well as some others, said segment regional localization being of an importance due to its potential capacity to implement innovations, to find modern production solutions, as well as to integrate forces in order to reach a synergy effect and to realize emergent properties of regional economics. The goal of this paper is, in this connection, to consider practical aspects of the integrated formations in an industrial region under the context of strengthening of the synergy effect of the regional development. Scientific novelty of this research consists in a more precise description of cluster formations in an industrial region in terms of the integrated cooperation of the actors, as well as the role of a network of the innovative cooperation support structure in the regional clusters efficiency increase. Scientific and practical significance of the results achieved consists in the possibility to use the suggested recommendations as a practical tool for the development of strategically important directions of the Kemerovo region, and for creating of the regional cluster development programs, in particular.

II. SUBJECT OF RESEARCH

Under modern conditions, the development of integration processes involves a cluster approach. Methodological approaches to detection and identification of cluster formations are very diverse due to differences in methodologies, approaches and criteria. A method to form a cluster orientated regional information system in Eastern Bavaria could be considered as one of the first, expertise-based mostly, cluster identification methods [1]. Some other cluster identification methods are used abroad as well: identification of territories and regions characterized by a high specialized concentration (UK); competitive efficiency evaluation of companies, their export potential (Denmark, Austria, Finland); looking for economically significant industry groups (USA). There is no official cluster identification methodology in Russia, location quotient calculation being the most frequent one. There is, however, a recent suggestion of the Russian scientists [2, p. 165], concerning an approach to a cluster formation possibility analysis which is based on the study of a business environment, localization of successful industrial production plants in the region, production structure diversification, etc.

The location quotient method is the basic method to expose integrated intra-regional formations that has been used in this research, cluster formations of an industrial region being research objects thereof. The authors have suggested an approach which, as distinct from the existing ones, considers the formation of the emergent properties of the region at the expense of the cluster networking model of the organization of an industrial region economic area, as well as the optimization of resources usage in the course of the cluster programs implementation.

Materials of this research are based upon the complex fundamental scientific cognitive methods for study of complex social-economic systems – a systematic and comparative analysis, economic and statistic methods.

The conference was funded by RFBR according to the research project №16-05-20506

III. Results and discussions

The following results and conclusions have been drawn out of the research:

1. The problems that unfavourably affect the development of the innovative area of the industrial region have been identified, including: lack of competence potential in the independent creation of innovations and their commercialization due to the action of a number of factors considered, chronic and long-term lack of funding for research and development (R & D), low effectiveness of regional policy to stimulate innovation and create conditions for their commercialization; low motivation of business entities both in generation of innovations and their financing.

2.The arguments have been given proving the need of the strategic development of the regional clusters in the form of a cluster networking model of the Kemerovo region economic area organization with a broad organizational and administrative infrastructure which ensure achievement of emergent effects and economics result gains.

3. It has been stated, that the current state of the innovative system of the Kemerovo region does not create prerequisites for a priority investment in new technologies, formation of the innovative reproduction basis, which is of a paramount importance for the implementation of cluster initiatives. Only 5% of Kemerovo region enterprises uses a part of their capital investments for technological innovations. These and other factors reduce the total capacity of the region in the formation of a competitive innovation potential.

4. Practical recommendations have been suggested in the form of a set of complex organizational and management arrangements for the formation and implementation of long-term development strategy of cluster formation and innovation system of the Kemerovo region.

Best practices of developed countries have shown a tendency to strengthen the role of regional industrial agglomerations, using its economic potential in order to achieve economies of scale, especially in the sphere of innovations. The increasing relevance within the western territorial industrial policy acquires the so-called Smart Specialisation, the essence of which boils down to the need for differentiation of the regional policy instruments, based on the specifics of a particular territory. This approach allows us to solve one of the most serious problems of our time - the fragmentation of innovative research combined with the increased competition for investment resources. [3].

Foreign researchers suggest three typological region groups to be considered within the framework of Strategies for Smart Specialisation: knowledge-regions, where economics of knowledge and break-through technologies are actively developed; industrial production zones specialising in the implementation of basic technologies applicable to already existing technological processes; and the so-called “non-S&T-driven regions” which are lagging regions that do not have the capacity in science and technology [4, p. 1298].

Identification of regional specialization is becoming the key to the formation of regional industrial agglomerations, built on the principle of cluster formations - a special form of organization of the regional industry involving pooling within a single production and technological network of interconnected business entities.

The term "cluster" in its classical meaning, proposed by M. Porter, means "a group of geographically adjacent interconnected companies and associated organizations operating in a certain area and characterized by common activities and complementary to each other" [5]. Clustering of the economy was studied in a large number of scientific papers reviewing the impact of clusters on socio-economic development of the territory [6-8] and the factors of successful development of the cluster forms of companies organization [9] as well as clustering problems in regional economies [10-13].

As of today, separate cluster development centres have already been formed in the world economy: the North American, Western European and Asian [14]. The cluster approach to regional industrial policy organisation is still a comparatively new instrument for Russia. The Concept of a long term social and economic development for the Russian Federation up to 2020 has become a basic document to firstly touch on clustering aspects. Since 2010, the Russian Ministry of Economic Development has started a subsidiary support to the regions implementing pilot projects of innovative territorial clusters. Among the regions, implementing similar projects, there is the Kemerovo region with its cluster development program "Complex processing of coal and industrial waste." Currently, a number of emerging clusters can be identified in the territorial and economic space of the Kemerovo region, which are at different stages of development from embryonic or potentially possible (cluster building industry, Yurga) to the growth stage (coal chemical industrial cluster) (Fig.1).

Kuzbass is characterized by the leading role of large-scale industrial production, therefore, the coal – chemistry cluster has become a priority project, the main purpose of which is to organize the deep processing of coal and coal waste products using modern technologies to produce a variety of coal chemical products: up to 130 kinds of chemical products and over 5000 types of products in related industries

Implementation of technological innovations directly into the coal mining industry is of a paramount importance for the Kemerovo Region, as a big industrial and raw resources region [15]. Organisation of cluster production of knowledge-based coal chemical products is a way to solve the problem. It is the coal mining industry that can become not only a springboard, but the driver of innovative development of regional economy. The introduction of advanced technologies of deep processing of raw materials allows to go beyond mining of thermal coal and use to the so-called "coal by-product" for the production of a wide range of marketable coal chemical products with high added value. Of course, this way of development is quite capital-intensive, which can be a serious limitation in modern conditions: consolidation of efforts of the owners of coal mining enterprises, the state, and the scientific community is required. According to our estimates, based on the Ministry of Economic Development

data, the ratio of budget and non-budget (including private) investment in the financing of the approved program of the development of coal chemical industrial cluster is 1: 5, i.e. per each ruble of private funds the state planned 4.7 rubles of the budget funds.

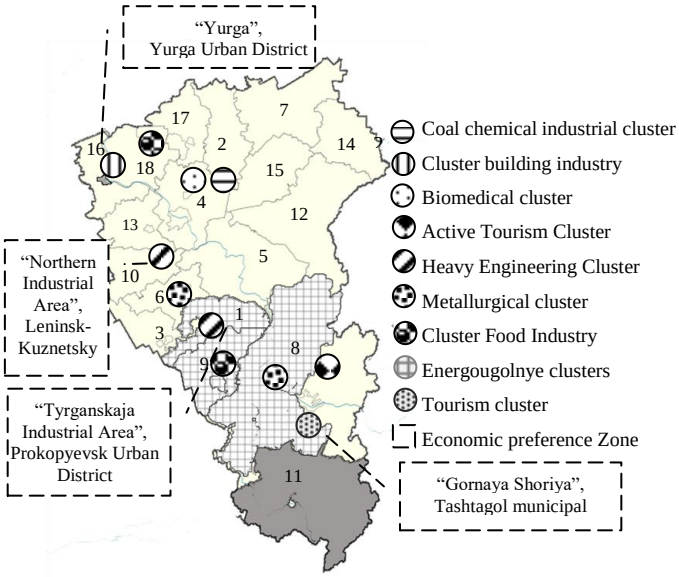

The municipal districts of the Kemerovo region:
1 – Belovsky; 2 – Izhmorsky; 3 – Guryevsky; 4 – Kemerovsky;
5 – Krapivinsky; 6 – Leninsk-Kuznetsky; 7 – Mariinsky; 8 – Novokuznetsky;
9 – Prokopyevsky; 10 – Promyshlennovsky; 11 – Tashtagol; 12 – Tisulsky;
13 – Topkinsky; 14 – Tyazhinsky; 15 – Chebulinsky; 16 – Yurginsky;
17 – Yaya; 18 – Yashkinsky

Fig.1. Location of clusters and EPZ in Kemerovo region

Given the shortage of investment resources and commitments on financing for cluster development program, the expectations of the regional authorities and the business community, of course, go beyond simple reproduction and profit. Therefore, one of the most important tasks assigned to the implementation of cluster initiatives is to achieve synergies in the production of high technology products of the region.

Alongside with the above, a number of problems which slow down the development of the industrial regions innovative area, the Kemerovo Region included, which in general have an unfavourable impact on the regional clustering processes:

1) Insufficient competency potential of the region in the independent creation of innovations and their commercialisation due to a number of factor: quality and quantity of human resources as the source of innovation generation, the number of innovative organisations;

– the average number of the organisations conducting scientific researches and developments in the Kemerovo region in 2007 – 2012 was 27 (the average value for industrial regions is 41) [16];

– the average number of manpower involved in developments and researches in 2007 – 2012 in Kuzbass was 1231 person (the average number for industrial regions is 8005) [16];

– The share of organisations involved in technological, organisational, marketing innovations in the Kemerovo region during 2009 – 2102 was 5.8% (the average value for industrialised regions for the similar period was 9.4%) [16].

2) The chronic and long-term lack of funding of research works and developments: the ratio of R & D expenditures to the gross regional product of the Kemerovo region remains stable at 0.1% in the period of 2007-2012 (the average for the industrial regions in the same period was 0.9 %, and in the Russian Federation – 1.4%) [16];

3) Low efficiency of the regional policy in encouraging innovations and creating conditions for their commercialisation;

4) Low motivation of economic entities both in generation of innovations and their funding: the lack of interest in the implementation of innovations due to not debugged system of planning, coordination and design of innovative infrastructure.

The current state of the regional innovative system of the Kemerovo region combined with low degree of production innovation performs as a negative factor reducing the overall opportunities of the region to forming of a competitive innovative potential.

At the heart of any regional cluster there is the activity of the company as the primary link of the economy. It was M.Porter who expressed his opinion on the need of rigid specialisation of resources, taking into consideration the existing and emerging clusters in the region, and the primary link of the regional economy - the company - is the main factor of competitiveness [5].

Having a diverse potential (P_1, P_2, … P_n), enterprises of the region are "bonded" by functional connections in the form of productive, competitive, organisational, investment, financing and other types of interaction. And the cluster as the system of given elements acquires the feature of emergence which manifests itself through the formation of new features of this regional system which are not characteristic for other separate elements (Fig.2).

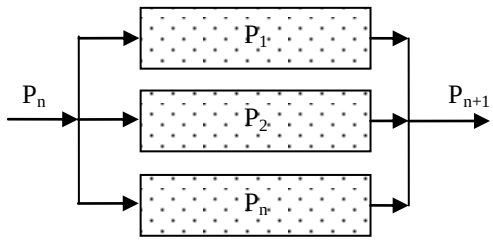

Fig.2. The effect of the emergence in the functioning of one cluster

In other words, if we express a regional cluster (RCl – regional cluster) as a set of potentials of separate enterprises which form it, then, a general cluster potential will possess the property of emergence:

$$RCI(P_1, P_2, ..., P_n) > \sum P_n \quad (1)$$

A regional cluster system, with its emergence, gets an opportunity not just to generate innovation, but also to find mechanisms for the spread of these "dot" innovations in a rather uniform branch and territorial scale. This is achieved by a network cooperation of all participants of the cluster, i.e. through forming of both vertical (i.e. Supply – Buyer) and horizontal connections which appear in cooperation with competitors (exchange of marketing researches, investment activity, participation in a partner's activity on a mutually beneficial basis, implementation of studies). As the analysis of research work on clustering shows, its network characteristics are expressed in existence of common purposes of its participants, mutually beneficial information exchange, developed business behaviour rules, lack of hierarchical subordination among the participants [17 – 19].

In the Kemerovo region an innovative "core" which acts as a generator of new ideas is the central link of the cluster. The innovative "core" concentrates the organisation, whose main objective is the creation of new knowledge in the implementation of research projects (Regional Research Institutes engaged in R & D, small innovative enterprises at universities, engineering laboratories, etc.). These organizations are called upon to provide the main impetus to the development of innovation, but they also have a high resource consumption, consuming a large amount of investment resources. In the Kemerovo region, the innovative "core" is based on the activities of institutions of academic and industrial sciences shown in Fig. 3.

Two "core shells" facilitate distribution of new knowledge in the area. The first one (marked as "I" in Fig. 3) presents transformation, an adaptation of new knowledge received to possibilities of its practical application in production with the help of business incubators, venture funds, and technology transference centres. In the Kemerovo region, the units of the first shell are as follows: the Student Business Incubator of the Siberian State Industrial University; Centre for Technology Transfer of the Siberian Federal District; Student innovative business incubator.

The second shell (marked as "II" in Fig. 3) presents the process of a large-scale introduction, distribution (diffusion) of the innovations in practice which implies an increase in the demand for innovative products. This process involves Techno parks, Techno polis of the region, as well as enterprises of the innovative-implementation type. The objects of this area of the innovative infrastructure include, primarily, the Kuzbass Techno park, a number of its structural subdivisions (Site # 1, Lab and Production Building "Ecology and Environmental Management"; Centre for Innovations Implementation) implement introduction of the innovative products to the market.

The clusters of the region such as an operating coal chemistry cluster and a number of emerging clusters can potentially conclude joint projects on the basis of existing infrastructure support belts in the networking environment, namely – the centres of technological audit and expertise, the centres of commercialisation and intellectual property management. Therefore, there is a possibility to create a structural integration-cluster model in the region, and its development will ensure emergence of new properties and qualities of the regional innovative system (Fig. 4).

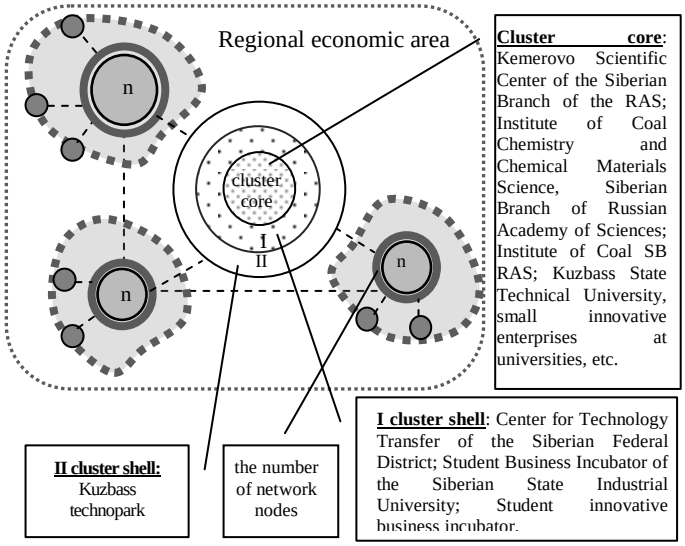

Fig.3. The scheme of cluster-network organisation of economic area of the Kemerovo region

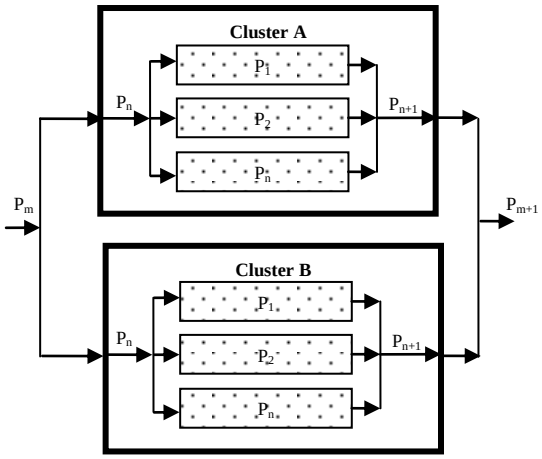

Fig.4. The effect of the emergence of the regional economic area

The clusters in their interaction in a regional social-economic space ensure an intensification of the whole set of processes - from emergence of a new knowledge to its further dissemination. Those processes cannot be implemented by a merely one cluster, or one regional subsystem with a similar degree of intensity. This is where the emergent property of cluster formations makes itself evident – the cluster potentials and features, on the whole, cannot be reduced to potentials and features of separate elements of the regional system. In this case, a condition of a practicality of creation of such an integrated-cluster model lies first of all in the profit of participation therein of each separate regional enterprise being higher in comparison to its autonomous activity outside of the cluster.

IV. Conclusion

The function of an integration-cluster model allows forming of qualitatively new features of regional economies, which are expressed in:

– intensification of innovative processes;

– diversification of the economy;

– forming a higher marketability of production;

– additional advantages for the cluster resident enterprises due to inner specialisation, minimisation of innovations implementation costs;

– costs reduction, e.g., by a cheaper access to different production factors (equipment, spare parts, qualified personnel, etc.) in comparison to other variants of enterprises integration (vertical, alliances forming);

– flexibility of production organisation combined with a high level of specialisation allowing to respond quickly and timely to the changing needs of the market and consumers.

Since innovative and investment factors are the driving force of an active clustering process, under modern conditions the measures are required to improve efficiency of the region innovative system. The authors consider it useful to implement the system of "production innovation identification" in order to support innovation-active enterprises regionally which could become cluster residents, i.e. to establish an expert degree and scale of new goods, or services in order to support those enterprises which already implement innovations, not just novelties (already implemented traditional technologies). The implementation of the system is possible by establishing an authorized evaluation body on the basis of the Federal Budget Entity "State Regional Centre for Standardisation, Metrology and Testing for the Kemerovo Region".

Monitoring of the effectiveness of the clusters in the region, especially in terms of the innovation component, is possible through the introduction of a uniform methodology for evaluating innovative activity in the region over the final results, taking into account the typological features of the industrial regions to manage the trend of the level of innovativeness of basic sectors of the Kemerovo region economy.

Identification of the best innovators by using the suggested measures will allow implementing the targeted encouragement of the directions of innovative development investments that are of a priority for Kemerovo region, namely:

– subsidy of credit interest rates for innovative development;

– assistance in certification (international included) of innovative goods, work, and services;

– introduction of "innovative vouchers" - certificates issued by regional authorities which will be a monetary equivalent to pay for different services (consulting, engineering, certifying) to encourage the demand for innovation and increase the innovation component in the companies' activities.

These and other measures will allow a positive influence on the intensity of clustering processes and formation of emergent features of the regional economy in the priority innovation-oriented areas.

References

[1] Blien, U., Maier, G. The Economics of Regional Clusters: Networks, Technology, and Policy. UK: Edward Elgar Publishing Limited, 2008. – 315 pp.

[2] Fridman Ju.A., Rechko G.N., Alekseenko Je.V., Krickij D.V., Pisarov Ju.A. "Cluster approach in the innovative models of traditional economics in Kuzbass". *Vestnik of Kuz.state tech. univ.*, 2012. 6, pp. 165–174.

[3] Osokina N.V., Kalashnikova E.A. "Globalization and the emergence of a new economy: challenges for Russia". *Vestnik of Kuz.state tech. univ.*, 2013. 4(98), pp.150–153.

[4] McCann P., Ortega-Argilés R., Smart Specialization, Regional Growth and Applications to European Union Cohesion Policy. *Regional Studies*, 2015, vol. 49, no. 8, pp. 1291-1302.

[5] Porter M., On Competition. Moscow: Williams, 2000. – 495 p.

[6] Klimova T.B., Vaganova O.V., "The intensification of innovation processes in the region on the basis of the economy of clustering". *Vestnik VSU.* Ser: Economics and Management, 2009. 2, pp. 47-53.

[7] De Propris L., Driffield N., The importance of clusters for spillovers from foreign direct investment and technology sourcing. *Cambridge Journal of Economics*, 2006, vol. 30, pp. 277-291.

[8] Grjazev M.V., Vasin S.A., Shahov A.Ju., Sidel'nikov Ju.A., 2012. "Regional clusters of the motor transport enterprises: innovation and synergies". *Regional economics: theory and practice*, 2012. 7(238), pp. 9–13.

[9] Susana Borrás S., Tsagdis D., Cluster policies in Europe: Firms, institutions, and governance. *Edward Elgar Publisher*, 2008. – 304 p.

[10] Boush G.D., Kulikova O.M., Shelkov I.K."Agent based modeling clustering processes in regional economies". *Economy of region*, 2016, vol.12, no. 1, pp. 64–77.

[11] Kutsenko E., Pilot innovative territorial clusters Russia: a model of sustainable development. *Foresight-Russia*, 2015, vol. 9, no. 1, pp. 32–55.

[12] Fridman Ju.A., Rechko G.N., Krickij D.V. "Regional clusters and innovation development". *Vestnik of Kuz.state tech. univ.*, 2012. 5, pp. 129–138.

[13] Fridman Ju.A., Rechko G.N., Alekseenko Je.V., Krickij D.V., Pisarov Ju.A., "Cluster approach in the innovative models of traditional economics in Kuzbass". *Vestnik of Kuz.state tech. univ.*, 2012. 6, pp. 165–174.

[14] Foreign experience of formation of regional clusters as a competitive advantage "second nature" [Electronic resource]: [official. website] // 2008-2016. – Access: URL: http://ukros.ru/wp-content/uploads/2012/08/%D0%91%D0%B5%D0%BB%D0%BE%D0%B2%D0%B02.doc / free (reference date 14/04/2016).

[15] Bereznev S.V., Baryshev M.A., Kumaneeva M.K., "Innovative investment in the economy and some approaches to evaluating the effectiveness of innovative investments". *Economics and business*, 2014. 11-2 (52-2), pp. 635-639.

[16] Federal State Statistics Service [Electronic resource]: [official. website] // 1999 – 2016. – Access: URL: http://www.gks.ru/ / free (reference date 14/04/2016).

[17] Tret'jak O.A., Rumjanceva M.N., "Network forms of inter-firm cooperation: the approaches to the explanation of the phenomenon". *Russian Journal of Management*, 2003. 1, pp. 77–102.

[18] Bode A., Talmon l'Armee T.B., Alig S., Research note: clusters vs. networks – a literature-based approach towards an integrated concept. *International Journal of Globalisation and Small Business*, 2010, vol.4. no. 1, pp. 92–110.

[19] Cooke P., Re-framing Regional Development: Evolution, Innovation and Transition. *Abingdon, Oxon OX 14 4RN: Routledge*, 2013. – 367 p.