Design of books arranging robot control system in library

Biao JIANG, Guang-you YANG*, Song SHEN, Jun MA

Institute of Agricultural Machinery, Hubei University of Technology, Wuhan Hubei, China

Keywords: library; robot; PLC; single-chip microcomputer

Abstract: In view of present situation of the lack of intelligent machines in library, this paper introduces a new books arranging robot and gives the design scheme of control system. The books arranging robot is mainly composed of a mechanical frame and an arranging mechanism. When the arranging mechanism stays in a layer of the bookshelf, the robotic arms clamp boos and drag them to the shaking board. The shaking board makes irregular books neatly arranged on the back baffle by jittering back and forth. Finally, the robotic arms drag these books back to the layer of bookshelf. The control system uses PLC to control the whole motion process and processes books clamping signal with single-chip microcomputer. The combination is an effective solution to the clamping force in the case of different number of books. Moreover, modular programming can simplify the design of system.

Introduction

Currently the library has realized many aspects of information technology such as the purchase of books, collection of books, readers borrowing by two-dimensional bar code, RFID and database technologies, which improve the management and service level of library. In recent years, some domestic and foreign agencies have conducted preliminary attempts to the feasibility of library robot, and achieved certain results[1], such as the mobile robot which has been used in Humboldt University library[2], the CAMP books robot of automatic access developed by John Hopkins University[3], The librarian robot of University of Jaume-I named UJI[4], the mini self library launched by Dongguan Library in China[5]. Library robot is the integration of automation and information in the daily application of the library, greatly improving the level of automation of the library. However, in the wave of information technology of library, the library is still short of intelligent machines of books based on machinery and automation. For example, The books sorting such as upper and down shelves, bar code scanning, classification and checking, still rely on manual operation to complete[6]. As efficient and automation equipment, the robot has played a great role in automotive, machinery, aerospace and other modern manufacturing. It has been the hot topic in library intelligence that applying highly efficient robot to the daily library services is to reduce labor intensity of librarian and to improve efficiency of sorting books[7] .This paper introduces a new control system of books arranging robot, which can realize the functions of arranging books of the bookshelf.

The scheme design of control system

The mechanical structure of books arranging robot

The overall structure of books arranging robot is shown in Fig. 1. It is composed of a mechanical frame and an arranging mechanism. The arranging mechanism is installed on the mechanical frame through a connecting board, and it is driven up and down through the sprocket wheel in order to stay in different layers of the bookshelf by the stepper motor 1 and the worm gear.

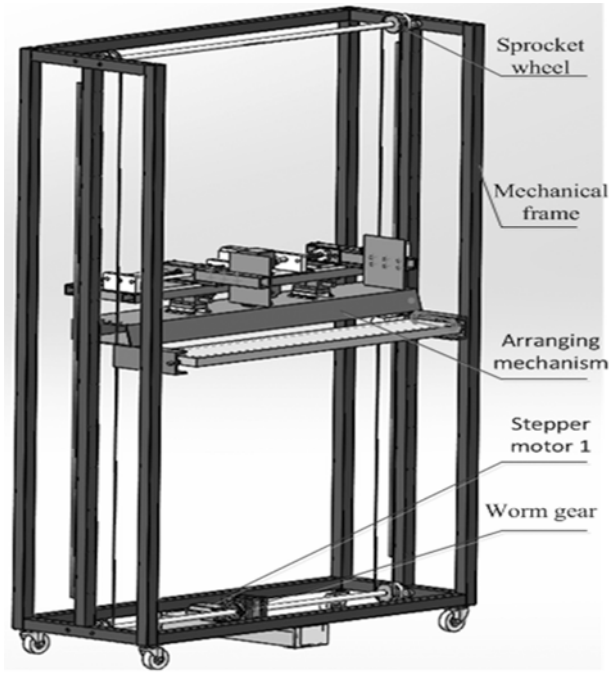

Fig. 1. The overall structure of the bookshelf arranging robot

Fig. 2 shows the arranging mechanism. It completes the work of books arranging with simulating the action of hand. The stepper motor 2 drives the robotic arms stretching out to the bookshelf by ball screw with a pulley, and the stepper motor 3 drives the robotic arms clamping books by ball screw with a worm gear. After these books being clamped, they will be dragged to the shaking board, and then the stepper motor 4 will drive the shaking board jittering, making irregular books neatly arranged on the back baffle.

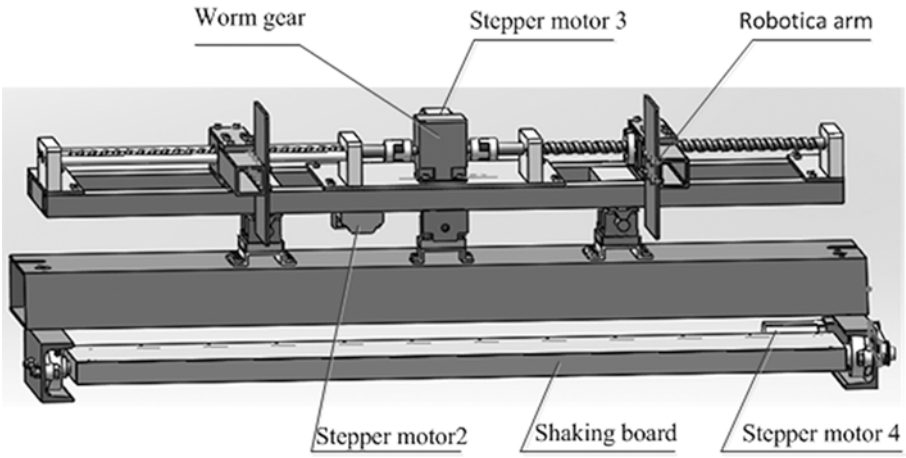

Fig. 2. The structure of sorting mechanism

The system structure of books arranging robot

The books arranging robot begins to arrange books from first layer of the bookshelf, and the workflow of each layer is identical. The specific workflow of books arranging is: The arranging mechanism reaches a layer of bookshelf, stretching out the robotic arms to the bookshelf ->clamp books with the robotic arms coming together with the same speed->take back the robotic arms with books->release books with the robotic arms slightly->make the shaking board jittering-> clamp books with the robotic arms coming together with the same speed again-> stretch out the robotic arms to the bookshelf again-> release books with the robotic arms slightly again->take back robotic arms again-> drive the robotic arms back to the origin.

The structure of control system is shown in Fig. 3, setting the corresponding parameters through the touch screen, controlling movements in all directions with PLC, thus completing the whole books arranging of bookshelf.

The proximity switches are used to limit movement in all directions, and the microcontroller detects the clamping force when the robotic arms have clamped books. When the robotic arms begin clamping, PLC sends a clamping signal to the Microcontroller, after having received the signal, the Microcontroller will process accordingly. When the pressure reaches a predetermined Fi between the books and the mechanical arms, the microcontroller sends another signal as a feedback to PLC, and the PLC will drive the robotic arms stopping clamping. Different clamping force Fi in different amounts of books will be handled over to the Microcontroller.

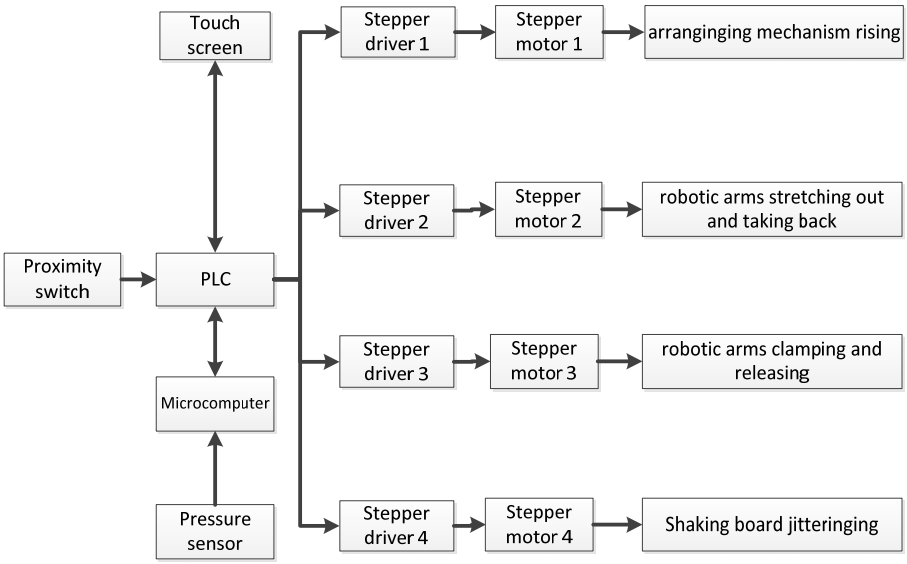

Fig. 3. The structure of control system

The hardware design of control system

According to the analysis of the robot motion process, the input is determined to be 9, and the output is 9 in this control system. We select MITSUBISHI FX1N-40MT, which contains four-way 100k high speed pulse. The schematic diagram of control system is shown in Fig. 4, six switches of PNP are used as the location restriction of up and down for the arranging mechanism, the location restriction of front and back as well as the location restriction of left and right for robotic arms respectively. For stepper motor 1, we select 86BYG250D stepper motor with MA860H stepper driver and TA-200 transformer as power source, controlling the arranging mechanism up and down with the worm gear reducer. At the same time, for stepper motor 2, stepper 3, and stepper motor 4, we select 57BYG250C stepper motor with DM542 stepper driver to control the movement of front and back for the arranging mechanism, left and right for the robotic arms as well as the jittering of the shaking board. The P3.0 port of single-chip Microcomputer is connected with the X12 input port of PLC through optical coupler module, sending a signal to PLC when the clamping force is enough, In addition, the output Y12 of PLC is connected with the P3.1 port of single-chip Microcomputer. In the meantime, we select touch screen of TK6070ip as the operator panel to complete the information interaction with PLC in order to reduce the input of PLC that are occupied by buttons and switches.

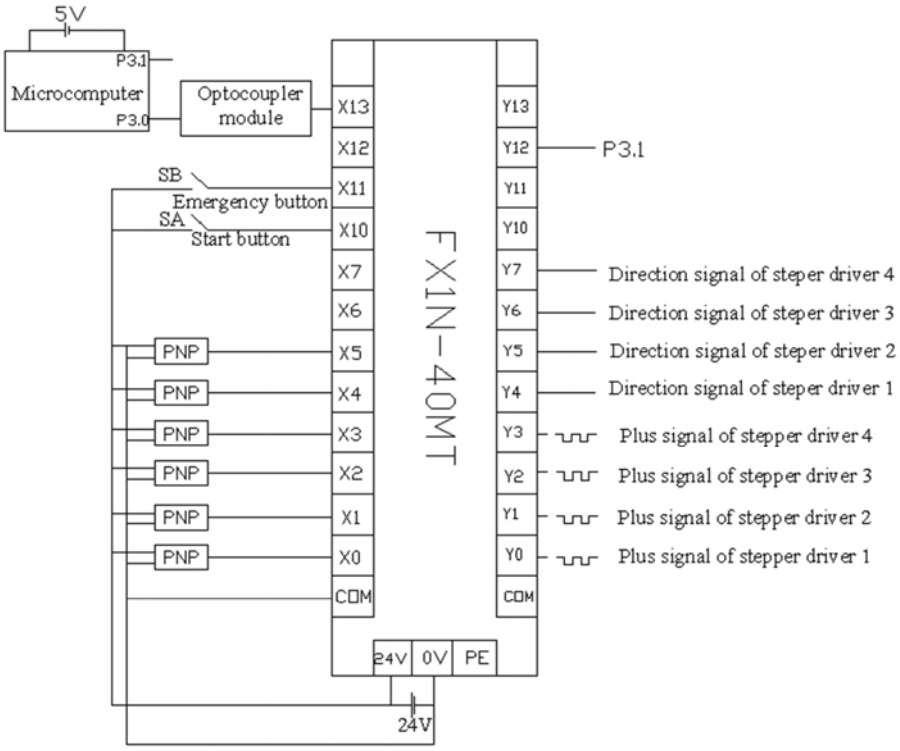

Fig. 4. The schematic diagram of control system

The software design of control system

According to the function and realization of control system, PLC mainly controls the movements of each direction, and the Microcomputer deals with the clamping force in the process of the robotic arms clamping books. Here, we decide to set up three control modes for the control system, namely automatic mode, debugging mode and homing mode. The automatic mode is used to complete the work of books arranging of the bookshelf in accordance with the procedures that have been set up in advance. The debugging mode is applied to the maintenance of the books arranging robot when something happens. The homing model is applied to the initialization after the failure. The control system is programmed by modular programming, which is divided into initialization module, automation module, debugging module, homing module and execution module as shown in Fig. 5. When the system powers on, the program will enter the initialization module. the debugging button M1 that stands for entering debugging mode and the origin button M3 that stands for entering homing mode is OFF in their initial state, so that the control system is defaulted to be automatic mode, After the program enters the automatic module, then the program will jump to the P2 through the CJ instruction, coming to the execution module. The flowing is introduced simply for each module as an example in automatic mode.

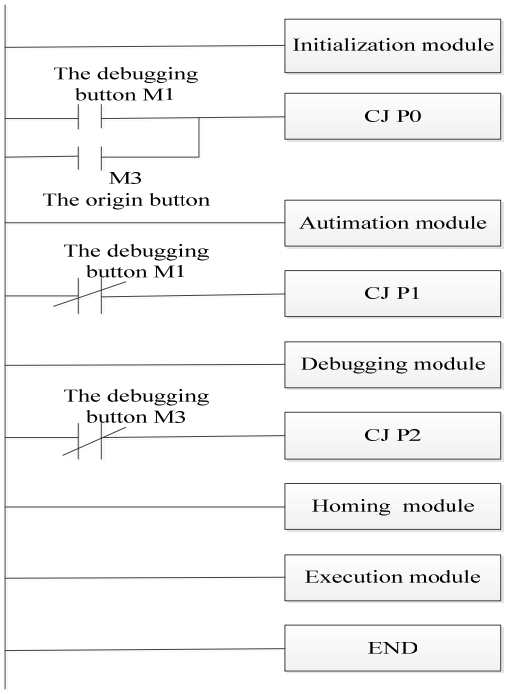

Fig. 5. The program frame of control system

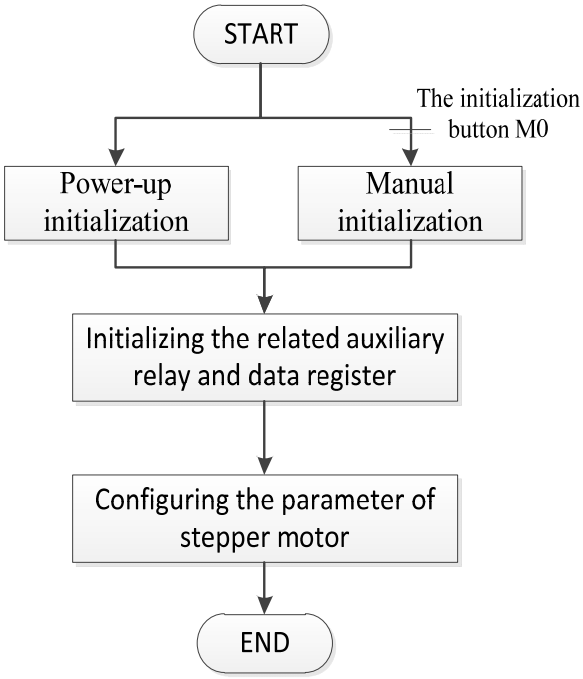

Fig. 6. The flow chart of initialization module

The initialization module

The flow chart of the initialization module is shown in Fig. 6. The program is divided into power-up initialization and manual initialization. After power up, the parameter of stepper motor such as frequency and pulse will be stored in the corresponding data register through the MOV instruction, and the related auxiliary relay and the data register will be initialized. On the other hand, when the initialization button M0 that stands for initialization is pressed on the touch screen, the programming will enter the manual initialization, and complete the same function as the Power-up initialization.

The automatic module

The automatic module sets an origin flag M5. Only when trigging the flag X1 stands for the location restriction of down of the arranging mechanism, the flag X2 stands for the location restriction of left of robotic arms, the flag X4 that stands for the location restriction of back of robotic arms ,will the origin flag M5 be trigged. The automatic mode will not be executed until the origin flag is active.

The flow chart of the automation module is shown in Fig. 7. In this module, the program only triggers the motion flag that stands for executing a corresponding action according to the condition flag of the corresponding action. Executing the corresponding action is completed in execution module depending on the responding motion flag and providing the condition flag of next action. For example, when the start button is pressed on the touch screen in automatic mode, it will trigger the rising flag M10 that stands for the arranging mechanism rising as the motion flag. Then, the program will enter the execution module through the CJ instruction with the state of the debugging button M1 and the origin button M3 being OFF. In the execution module, the program will respond to the rising flag M10 that stands for the arranging mechanism rising, and control stepper motor to move the arranging mechanism to the specific layer of bookshelf. When the arranging mechanism moving to the correct place, the program in the execution module will trigger the condition flag M11 as a condition flag that the robotic arms stretches out in automatic module. As mentioned above, the whole action of the automatic mode will be completed continuously through the cooperation between motion flags of automatic module and condition flags of execution module.

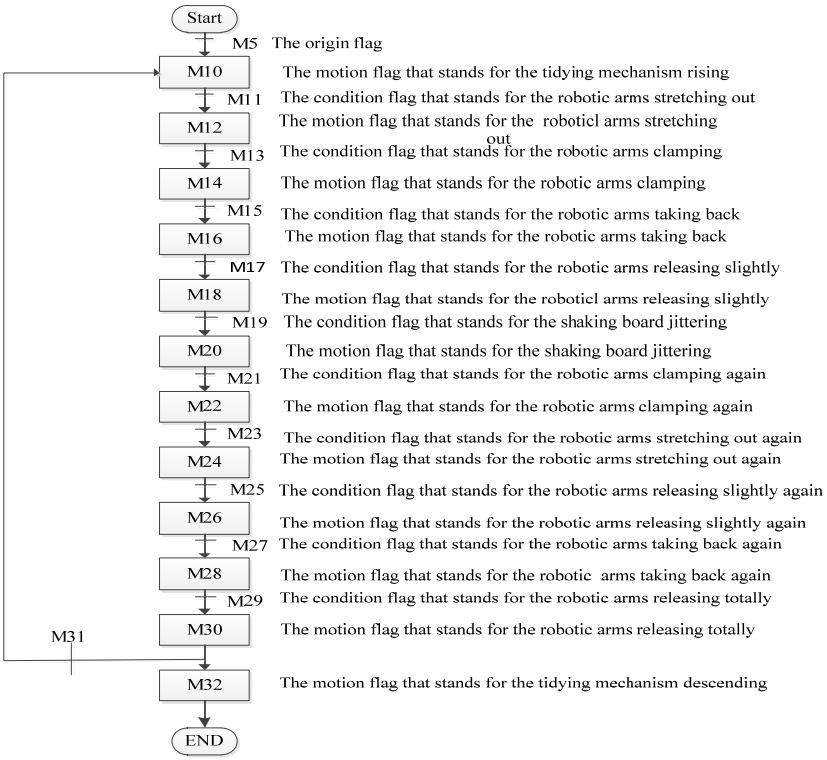

Fig. 7. The flow chart of the automatic module

The execution module

The flow chart of the execution module is shown in Fig. 8. The program in the execution module will respond to the motion flag that was triggered by the corresponding action from the automatic module, then controlling the corresponding stepper motor to complete the corresponding movement through PLSY instruction. When completed, the program will trigger the condition flag as a condition of next action. Only when the condition flag being responded, the program in the automatic module will trigger the motion flag that controls the next action, then executing the next action according to the responding motion flag in execution module. With the circulation continuously, it will complete the whole action in automatic mode.

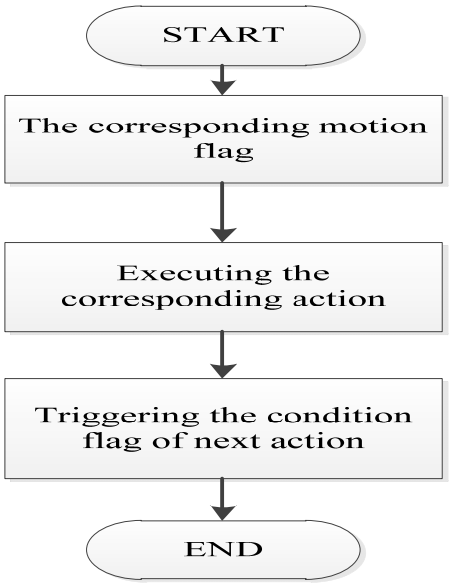

Fig. 8. The flow chart of the execution module

Conclusions

The control system by the combination of PLC and single chip microcomputer to control the sorting robot complete the function of book arranging of the bookshelf. The design scheme has the advantage of low cost, wide applicability, easy realization, and the bookshelf will not be reconstructed greatly. However, the books arranging robot needs manual help on the move. What follows is that we will focus on the improvement of automatic navigation and mechanical arm, and make further efforts to improve the intelligence of the bookshelf arranging robot.

Reference

[1] Hongbing Shen, Wei Huang, New revolutionary of management in library stack - Research and Enlightenment of library robot managing stack, J. Information Sciences Agricultural Library. 23(2011):97-99.

[2] Tetsuo Tomizawa, Akihisa Ohya, Shin'ichi Yuta, Book Browsing System using an Autonomous Mobile Robot Teleoperated via the Internet, C. Proceeding of the 2002 IEEE/RSJ Intl.Conference on Intelligent Robots and Systems EPFL, Lausanne, Switzerland, October 2002.

[3] Suthakorn J, Lee S, Zhou Yu, A Robotic Library System for an Off-Site Shelving Facility, C. Washington DC: Proceedings of the 2002 IEEE International Conference on Robotics & Automation, 2002:3589-3594.

[4] Prats M, Ramos-Garijo R, Sanz PJ, Del Pobil AP, Recent Progress in the UJI Librarian Robot, C. 2004 IEEE International Conference on Systems, Man and Cybernetic, 2004, 5227-5232.

[5] Information on http://www.ecchn.com/20071212ecnews32442887.html.

[6] Qiong Liu, Research of library Robot System, C. Hangzhou: Fifth Global Conference on Intelligent Control and Automation,2004:4891-4893

[7] Mingfang Du, Jianjun Fang, Lanzhen Liang, Design of fuzzy PID controller about Library robot manipulator parameters self-tuning, J. Journal of Intelligent Systems, 7(2012):161-166.