ATLANTIS PRESS
Advances in Engineering Research, volume 103
Proceedings of the 3rd International Conference on Material Engineering and Application (ICMEA 2016)

Modal Analysis of Three Dimensional Numerical Control Laser Cutting Machine Based on Finite Element Method

Yun-Xin CHEN*

School of Electromechanical &Architectural Engineering, Jianghan University, Wuhan, 430056, China

*Corresponding author

Keywords: Finite Element, Three Dimensional Numerical Control Laser Cutting Machine, Dynamic Contact Analysis, Modal Analysis.

Abstract. In this paper, the three-dimensional CNC laser cutting machine as the research object, the finite element analysis software platform, using the related theories of modal superposition of the main moving parts of 3D CNC laser cutting machine for instantaneous modal analysis and the equipment of dynamic contact analysis; in structural design, should consider the modal of the fuselage beam etc. effect, avoid resonance.

Introduction

CNC laser cutting machine is a multifunctional automatic cutting equipment, high speed, high efficiency, low labor intensity and high degree of automation of sheet material, widely used in automobile manufacturing, aerospace, machinery manufacturing, petrochemical and other fields. Laser processing technology is also one of the most market prospects and industrial applications, one of the background technology, accounting for more than 70% of the share. As an advanced way of cutting, laser cutting processing of high precision, it is mainly used in aerospace and automotive manufacturing industry, such as aircraft, aircraft wing panel frame, main rotor, auto frame cutting . Because the laser spot is small, high energy density, cutting speed, cutting the sheet cutting out of the narrow edge, good verticality, small heat affected zone, cutting without radiation, noise and environmental pollution strong, and can cut a variety of metal and non metal materials . Compared with common flame cutting and plasma cutting, the advantages of CNC laser cutting machine determine the scope and application prospects of laser cutting technology. Laser cutting machine gradually replace the traditional cutting process equipment, become an inevitable trend.

In order to satisfy the requirement of the strength and rigidity of the equipment in the fast moving and fast cutting of the 3D numerical control laser cutting machine, the dynamic analysis is made in this paper. In the dynamic analysis, the structural response is not only related to the load and boundary conditions, but also to the initial state of the structure. For the problem of space, by using the theory of material mechanics and other basic formula cannot be solved, so this paper adopts the theory of finite element solution in time domain at any point on the stress, strain and displacement, and then use the numerical integration technique in the time domain response of each point.

Finite element method is a kind of modern computing method, which is developed rapidly with the development of electronic computer. It will solve the field as many as by interconnection of small subdomain finite element, for each unit there is a suitable approximate solution, then solve the domain to meet the conditions, so as to get the solution, this solution is not exact solution, but the approximate solution. Because the actual problem is replaced by a simpler problem. Because most practical problems are difficult to get accurate solution, the finite element method is not only high precision, but also can adapt to various complex shape, so it has become an effective means of engineering analysis. In this paper, the finite element software is used to carry out the dynamic analysis.

Modal Analysis of Three Dimensional Numerical Control Laser Cutting Machine

Dynamic analysis is different from the static analysis, the stress, strain and displacement of the cutting machine are changed with the change of time . Because of the requirements of the process, the start and stop time of the cutting machine is very short (t=0.2s). The dynamic loads generated by this time have great influence on the strength and stiffness of the structure of the cutting machine. This is the key point of this paper, namely, the transient dynamic analysis. And modal analysis is the most basic content of all dynamic analysis. Mode is the inherent property of the structure, only with the material properties and mechanical structure, and the length of time is not related to the load. The main parameters of the modal parameters are: eigenvalue, natural frequency, generalized mass, and compound modal damping.

Frequency Extraction and Analysis of Beam Components of Cutting Machine

Before the modal analysis, it is necessary to carry out the extraction of relevant frequency, which is the basis for determining the time step of dynamic analysis. Beam, the main drive beam and the auxiliary beam are the main moving parts of the three dimensional numerical control laser cutting machine, and also the main influence parts of the stiffness, strength, stability and reliability of the cutting machine. The frequency analysis of these parts is mainly to obtain the vibration mode and natural frequency of the whole structure.

In three dimensional numerical control laser cutting machine is the main moving parts of the beam, three-dimensional numerical control laser cutting machine beam solid model as shown in figure 1.

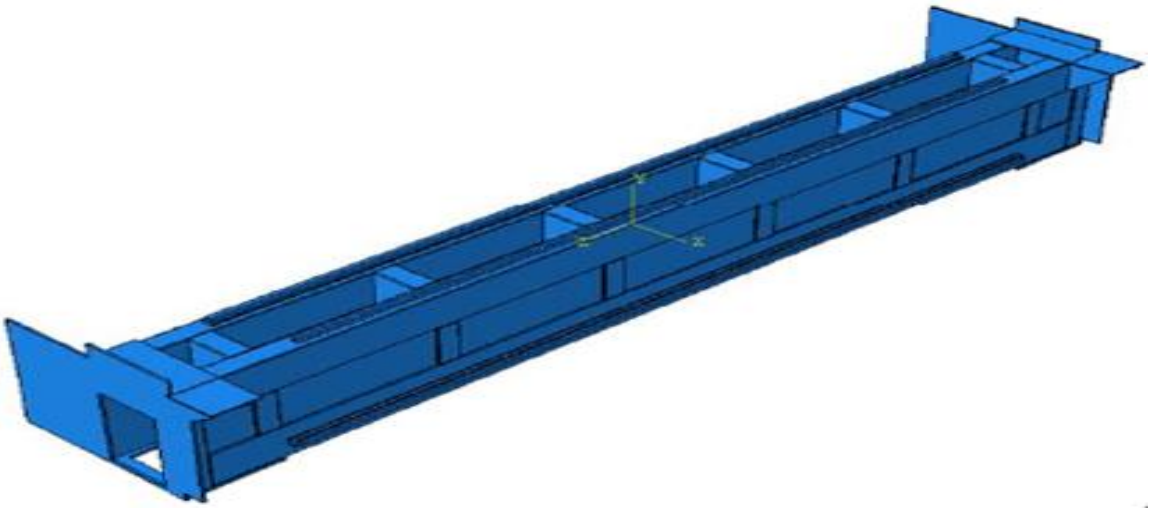

Fig. 1 Beam solid model of three dimensional numerical control laser cutting machine

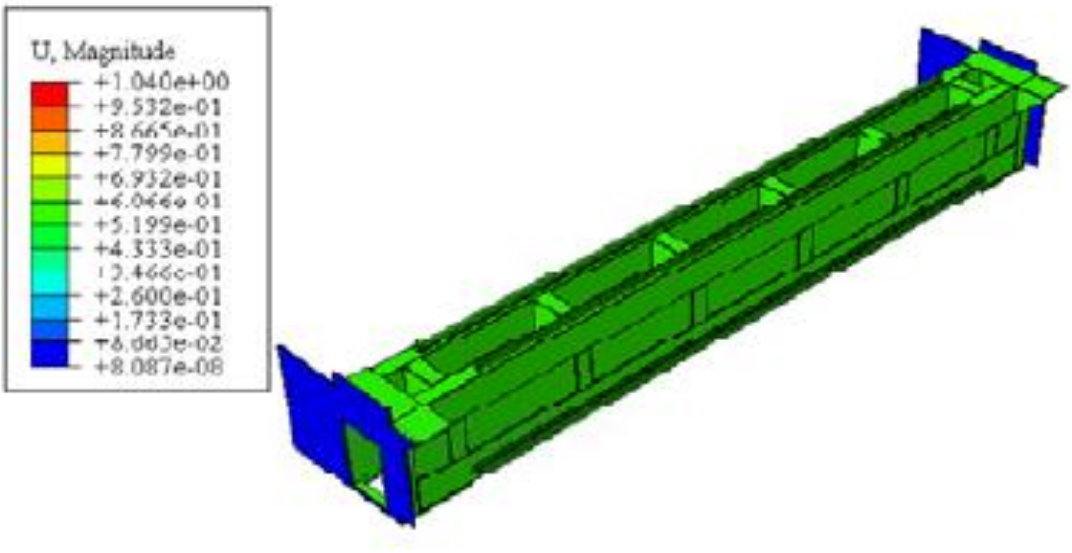

Fig. 2 Fourteenth order modes

The relevant information extracted from the results of the output of the finite element software is shown in table 1. It can be seen that the maximum frequency of the twenty-fifth order mode is 285.23Hz, the corresponding period is . The data in Table 2 reflects the degree of freedom of the beam and other structures of the laser cutting machine. For example, the fourteenth order mode is mainly in the direction of X. Amplitude is 1.040mm (shown in Fig. 2), in the Y and Z direction of the vibration mode is small, the vibration is not obvious.

Tab. 1 Transverse beam characteristic value of three dimensional numerical controllaser cutting machine

MODE NO	EIGENVALUE	FREQUENCY		GENERALIZED MASS	COMPOSITE MODAL DAMPING
		(RAD/TIM)	(CYCLES/TIME)		
1	-3.08059E-06	0.0000	0.0000	1.11671E-02	0.0000
2	-2.82196E-06	0.0000	0.0000	1.02001E-02	0.0000
3	-1.18769E-06	0.0000	0.0000	1.31446E-02	0.0000
4	-6.61210E-07	1.91164E-04	3.04246E-05	1.99949E-02	0.0000
……					
24	63023.	39.955	251.04	3.17666E-03	0.0000
25	81356.	45.396	285.23	4.97379E-03	0.0000

Tab. 2 Participation coefficient of transverse beam in three dimensional cutting machine

MODE NO	X-COM	Y-COM	Z-COM	X-ROT	Y-ROT	Z-ROT
1	-0.22823	-6.49768E-02	-2.18391E-02	247.61	-1117.0	8.5359
2	7.28477E-02	-5.27301E-02	1.5048	-30.570	-39.105	-6.1697
3	0.94196	0.90036	-3.70749E-07	-88.058	-41.055	-69.683
4	0.36320	0.79313	4.12404E-02	1.8280	-847.89	-533.46
……						
14	1.7257	-1.9278E-02	-3.93345E-08	1.8855	-7.0841	159.97
……						
24	3.62214E-12	-1.09368E-11	2.81423E-11	2.34962E-08	-3.29337E-08	-2.229E-09
25	-5.29214E-12	1.54088E-12	5.59727E-11	1.72533E-08	1.23037E-08	-3.193E-09

Tab. 3 is the output beam quality machine effective 3D CNC laser cutting, it reflects the quality of the modes are activated in various degrees of freedom, in the X direction, the lowest order modes with significant quality is fourteenth order. Laser 3D NC cutting movement direction of quality vibration machine's main components is X direction, from the table we can see that the effective mass in the X direction is 1.1062t, and the output file can be seen in the total quality model for 1.106236t display. The ratio of the total mass of the model to the X direction is 1.1062/1.106236=99.99%, so the model is sufficient to ensure the accuracy of the model to extract the 25 order mode.

Tab. 3 The effective mass of the beam of three dimensional numerical control laser cutting machine

MODE NO	X-COM	Y-COM	Z-COM	X-ROT	Y-ROT	Z-ROT
1	5.81693E-04	4.71471E-05	5.32610E-06	684.67	13934.	0.81364
2	5.41296E-05	2.83609E-05	2.30983E-02	9.5320	1559.8	0.38826
3	1.16630E-02	1.06555E-02	1.80678E-15	101.93	22.156	63.826
4	2.63759E-03	1.25780E-02	3.40068E-05	66816.	14375	5690.1
……						
6	4.16781E-02	2.83459E-05	4.37671E-05	255.73	2.16459E+05	896.33
……						
14	0.99793	1.24533E-04	5.18453E-16	1.1912	16.816	8575.2
……						
25	1.39300E-25	1.18094E-26	1.55826E-23	1.48058E-18	7.52941E-19	5.07144E-20
TOTLE	1.1062	0.10742	9.66398E-02	5.18088E+05	5.22686E+05	21474.

Instantaneous Modal Dynamic Analysis of Beam in Three Dimensional Numerical Control Laser Cutting Machine

Modeling Essentials: keep the material and boundary conditions of the beam parts of the three dimensional numerical control laser cutting machine to change, and exert an inertia force F. By the above analysis: the total mass of the moving parts of the m=1.11t, and the fast moving acceleration, by Newton's second law of inertial force F=ma=4.3587kN, perpendicular to the direction of the front surface of the beam, the duration is 0.2s, adding an instantaneous modal dynamic analysis step on the basis of the original model. The corresponding period from table 1 is T=1/285.23=0.0035s, and the corresponding reasonable analysis step is 0.0015s.

In order to observe the whole vibration attenuation process, the instantaneous modal dynamic analysis step is set to 1.2s. Taking into account the structural characteristics of the model itself and the boundary conditions, the selection ofα=2, β=0.

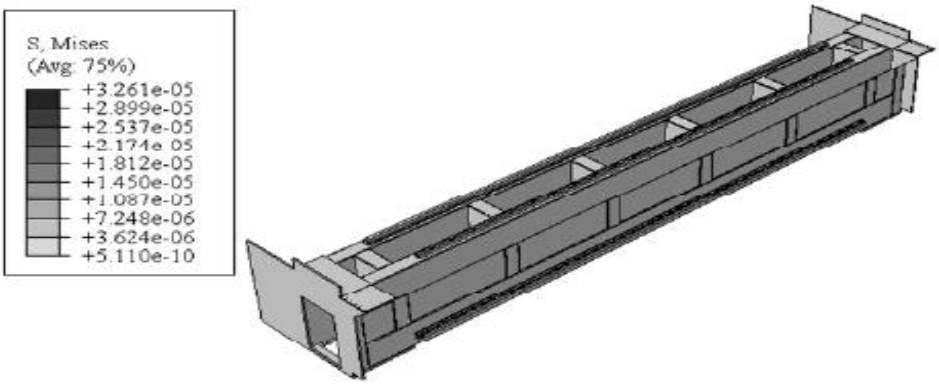

Fig. 3 Analysis step at the end of the Mises stress cloud pattern

Results and analysis: in the interface window of the finite element software, we can see the equivalent stress cloud pattern in each time increment step, as shown in figure 3. Mises the position where the maximum stress is at the connection of beam, drawing the equivalent stress versus time curve, 0-0.01s in the loading process, the equivalent stress increases; after loading, the equivalent stress is basically unchanged; after unloading, the equivalent stress decreases gradually; the damping in the system, the vibration attenuation gradually finally, the stress is zero, as shown in figure 4. Local amplification of the figure shows that the maximum stress occurs at the moment is 0.004s, the corresponding stress value 11.874MPa.

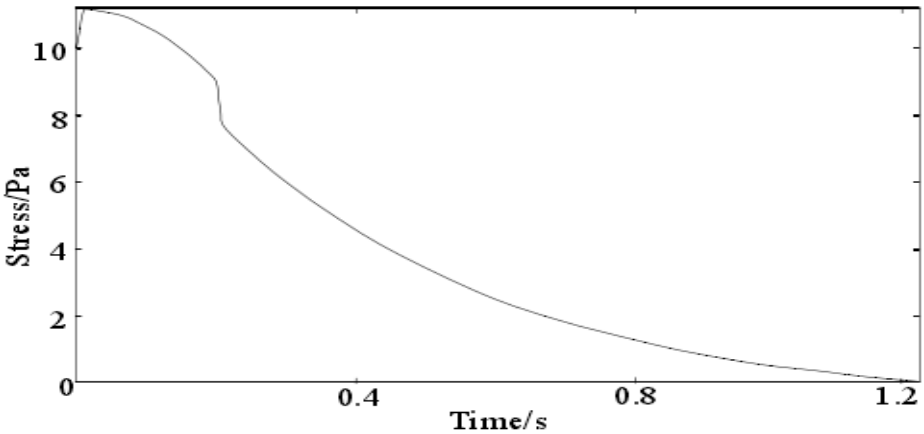

Fig. 4 The change of the stress at the cross beam of the three dimensional numerical control laser cutting machine

The instantaneous modal dynamic analysis of three dimensional numerical control laser cutting machine, it is known that the maximum value of the equivalent stress of a point in the middle of the

beam is 11.874MPa. In the process of acceleration, the amplitude is much higher than that of the deceleration. In the loading of 0.2s, the model has obvious oscillation, the moment of inertia of the load has a great influence on the fourteenth natural frequency of the fuselage.

By observing the center of the beam displacement of a point with the time curve, and the local amplification of the figure shows that the maximum displacement of a point in the middle of the beam appears in the 0.0195s, the displacement value of 0.100mm. Since then, under the action of Rayleigh damping, the beam and other components in the oscillation gradually decay, and soon stop oscillation. When the load is changed to 0, the displacement of the cycle is about 0.002s. In the X direction, the lowest order mode with significant mass is fourteenth order, and the corresponding natural frequency is 54.3691Hz, the period is 1/54.369=0.01839s. As shown in figure 5.

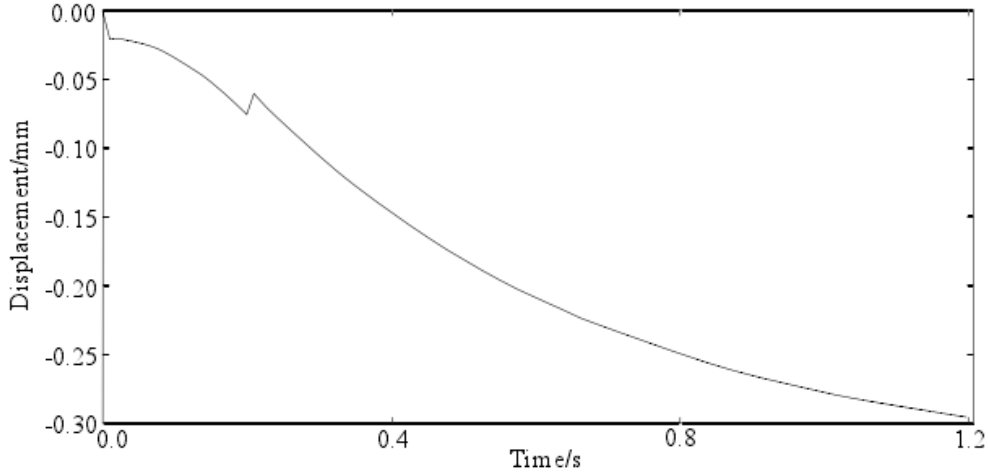

Fig. 5 Change curve of Z direction displacement displacement in middle transverse beam of three dimensional numerical control laser cutting machine

Summary

The frequency analysis and instantaneous modal dynamic analysis of three dimensional numerical control laser cutting machine are carried out by using the correlative theory of mode superposition. For three dimensional numerical control laser cutting, the beam has a great influence on the fourteenth order longitudinal vibration of the fuselage in the X direction, and the bending and longitudinal vibration of the Y and Z direction are very small. In the design of the machine, the influence of the beam on the whole equipment should be considered. Frequency extraction and analysis is the basis of instantaneous modal dynamic analysis, which saves a lot of computation time and improves the accuracy of the model calculation. The instantaneous modal dynamic analysis of three dimensional numerical control laser cutting machine, it is known that the maximum value of the equivalent stress of a point in the middle of the beam is 11.874MPa. In the process of acceleration, the amplitude is much higher than that of the deceleration. In the loading of 0.2S, the model has obvious oscillation, the moment of inertia of the load has a great influence on the fourteenth natural frequency of the fuselage.

Acknowledgement

This research was financially supported by Dynamic analysis of three dimensional numerical control laser cutting machine Project number: B2015232.
Research and practice of laser cutting machine adapting to the special processing requirements Project number: CXY201404.
Teaching reform and practice of material mechanics course based on the training of creative talents in the era of MOOCS Project number: 2015275.

References

[1] Liu wenqiang. The present situation and Prospect of numerical control cutting method [J]. Mechanical workers (thermal processing), 2005, 9(09): 65-66.

[2] Deng yingjian. Laser cutting and its application in cutting ceramic materials [J] Mechanics 2004, 31(3): 55-60.

[3] Yu Du,Song Cen:Geometrically Nonlinear Analysis with a 4-node Mem rane Element Formulatedby the Quadrilateral Area Coordinate Method[J].Finite Element in Analysis and Design,2008,44(8):427-438.

[4] Li shuide. Study on Calculation of small diesel engine shafting modal analysis and simulation [D]: Master Thesis of vehicle engineering, Southwest Jiao Tong University, Chengdu, 2010:10-19.

[5] Ward Heylen, Stefan Lammens,Paul Sas:Modal Analysis Theory and Testing[M]. Levven:Katholieke Universiteit Levven-Department werktvi gkunde,1997:36-48.