ATLANTIS PRESS
Advances in Intelligent Systems Research, volume 130
6th International Conference on Mechatronics, Computer and Education Informationization (MCEI 2016)

Ginseng Must Cutting System Based on Machine Vision

Dingzhu Xue[1, a*] and Pei Xiao[1, b]
[1]JiLin Agricultural University, ChangChun, 130118, China
[a]9950502@qq.com, [b]4566254@qq.com

Keywords: Machine vision; Three-axis drive; STM32F407ZGT6; Binarization; Cutting system

Abstract. Ginseng industry has developed rapidly in recent years, but the process of its collection, especially the cutting of its must costs great manpower. It has greatly influenced the development of ginseng industry. The principle of the ginseng root cutting is by comparing its diameter to that of a certain ginseng. If it is less than the set value, the cutting operation will be carried out. In view of this, this paper designs a cutting system of three-axle drive based on machine vision system. First, the image will be processed after binarization by using image processing technology. Then, it will be combined into three-dimensional images of simple objects. Finally, the fixed diameter cutting operation of the regular object will be realized through the numerical judgment whether the diameter is less than the set value. The paper will introduce the system in detail from three aspects, that is, mechanical structure, hardware system design and software system design.

Introduction

Machine vision is the science and technology to study the use of computer to simulate biological vision[1]. It has a history of several decades from the start to the present. From the 1950s to the 1960s, the study of machine vision transited from the two-dimensional to three-dimensional. Since then, the machine vision has developed rapidly, all kinds of new concepts and theories having emerged. Today, China has become one of the world's most active regions in the development of machine vision applications, covering various industries, including industrial agriculture, medicine, military, aerospace, meteorology, astronomy, public security, transportation, security, scientific research, national economy and so on. Furthermore, high requirement parts processing and corresponding advanced production line make a lot of machine vision systems with the international advanced level and application experience enter China.

Ginseng cutting is the process to separate the Ginseng fibrous root from the main branch mainly operated by the manpower. But this method is time-consuming. In view of this, this paper designs a cutting system of three-axle drive based on machine vision system. This system can realize the fixed diameter cutting operation of the regular object by using the technology of simple image processing and three-axle drive. The STM32F4 microprocessor with Cortex-M4 core has the ability to generate multi-channel PWM output of the TIM and with independent sampling circuit ADC. The control system peripheral circuit with fast real-time control speed is simple, stable, reliable, and cost-effective. So it’s suitable to be used as the drive of three-axis drive system[2].

The Design of the Overall Structure of the System

As is shown in Figure 1, the system includes the PC terminal, the image acquisition terminal and the control terminal. The PC is responsible for converting the collected image data into the corresponding control instruction, and then sends it to the control end through the serial port communication. The controller of the control end adopts the high-performance (high-performance) image acquisition device, which is used to collect the corresponding image. STM32F407ZGT6 development board is responsible for the stepper motor and cutting head control. At the same time,

Copyright © 2016, the Authors. Published by Atlantis Press.
This is an open access article under the CC BY-NC license (http://creativecommons.org/licenses/by-nc/4.0/).

there is a 5-inch LCD touch screen at the control side which can display cutting head position and the corresponding control state, do the cutting operation and control the system in real time.

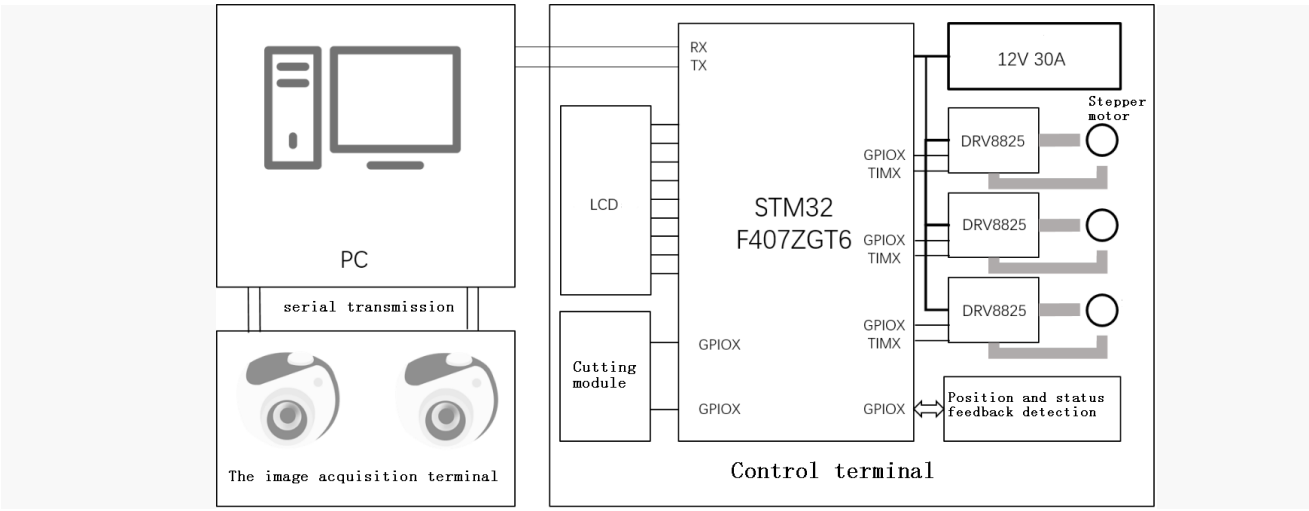

Figure 1. The design of the overall structure of the system

The Overview of the System Machinery and Equipment

The system based on the three-axis coordinate of the cutting object converts the corresponding three-axis coordinate into the spatial displacement of the frame. So the cutting head can reach the specified cutting point in the cutting system. The mechanical part of the system consists of a mechanical platform, a three-axis drive system and a cutting head [3].

The mechanical platform of the system is made of 30cm × 30cm × 50cm aluminum frame. The three-axis transmission system is shown in figure 2.1. The stepping motor is used as the power source. The XY plane adopts the H-type structure, which can better control the XY plane cutting precision. Cutting head is constituted by the micro-high-speed motor and cutting pieces. Three parts combined with each other, can achieve fixed-point cutting and ensure the accuracy of cutting.

The Design of Hardware System

The Principle of Stepper Motor Control. Stepper motor is a digital control motor. It can transform the received electrical pulse signal into angular displacement. In the case of no overload, the speed and stop position of the motor depends only on the pulse signal frequency and pulse number, without being affected by load changes. The existence of this linear relationship, coupled with the periodic error of the stepper motor, without the accumulation of error and other characteristics, makes the stepper motor used widely in the speed, position and other control areas.

Stepper motor is generally divided into permanent magnet type (PM), reaction type (VR) and hybrid type (HB) [4]. When the current through the stepper motor coil changes in the correct order, the stepper motor will rotate in accordance with a certain direction. Table 3.1 shows the step-by-step current sequence of the stepper motor windings in full and half-step mode. When using a stepper motor driver, only one pulse signal and one direction signal are required for the stepper motor. The stepper motor driver will convert this signal to the correct current sequence through the coil of the motor. When given a stable rate of pulse, the stepper motor will rotate at a constant rate.

Table 1 Motor coil winding through the current sequence under different operating modes

electrode	coil A	+	+		-	-	-		+
	coil B		+	+	+		-	-	-
operating mode	work	1		2		3		4	
	half step	1	2	3	4	5	6	7	8

DRV8825 Drive and Cnc Shield v3 Expansion Board. The DRV8825 is an integrated motor driver chip designed to be used in printers, scanners and other automation equipment produced by Texas Instruments. It integrates two H-bridge circuits and an on-chip 1/32 microstepping indexer to drive either a bipolar motor or two DC brush motors. If the voltage ranging from8.2V to 45V is input, the effective current of 1.75A can be provided. So it can withstand peak current of 2.5A at 24 V at 25 °C. Good thermal characteristics of the chip can be ensured by on-resistance as low as 0.2 Ω. In addition, fast response short circuit, overheating, undervoltage and cross-conduction protection function circuit can be integrated to detect fault conditions and quickly cut off the H bridge to provide protection for the motor and driver chip. The functional block diagram is shown in Figure2.

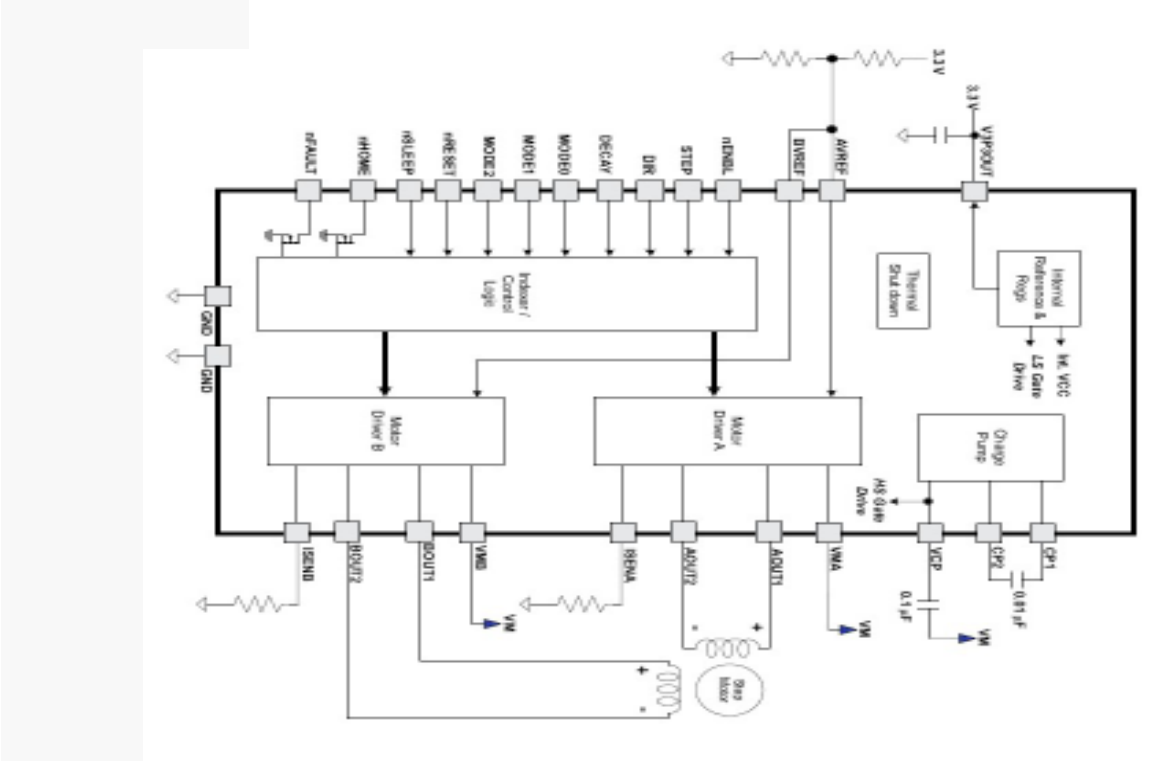

Figure 2. DRV8825 function module block diagram

Cnc shield v3 expansion board can be used as engraving machine, 3D printer driver expansion boards. There are a total of 4 slots of stepper motor drive module, which can drive 4 stepper motors. However, each motor only need two IO ports, which is, six IO ports can manage three stepper motors well. It's easy to be used and end up the cumbersome of traditional stepper motor operation. DRV8825 drive module is used as a drive expansion board of the three-axis system.

Selection of the Controller. The controller of three-axis drive system adopts STM32F407ZGT6 of STM32 series. The controller uses Cortex_M4 core and owns a total of 112 I / O port. These I / O ports can control the motor rotation rate and rotation direction, display and collection of LCD touch screen data and the movement of the cutting head.STM32F4 has 12 16-bit timers and two 32-bit timers. Other timers can be used to generate PWM output except TIM6 and TIM7. High-level timers,

TIM1 and TIM8, can generate 7 PWM outputs, while the general-purpose timer can also produce 4 PWM outputs at the same time.

The Software System Design

The purpose of image binarization is to preserve the most interesting parts of the image. In many cases, image binarization is necessary image preprocessing before image analysis, feature extraction and pattern recognition. This seemingly simple problem has been attracting considerable attention from scholars at home and abroad over the past forty years, resulting in hundreds of threshold selection methods. However, as the other image segmentation algorithms, there is no existed method to deal with various images and get satisfactory results. The system uses a threshold method based on the minimum value of the bottom. It is useful for images with significant bimodal histograms that seek the trough of a bimodal as a threshold. But this method can not obtain a threshold. This method is not appropriate for those with flat histograms or single-peak image.

The implementation of the function is an iterative process. It's important to determine whether it is already a bimodal histogram each time before the processing of the histogram data. If not, smooth the histogram data radius 1 (window size 3). If a certain number of iterations, such as 1000 times, have not been obtained, the function execution fails. If successful, the final threshold takes the trough value between the two peaks as the threshold. (Note that in the encoding process, the smoothing process requires the information before the current pixel. so it is necessary to make a backup of the data before smoothing. In addition, the precision of the first data type is limited. Do not apply the histogram data of integer. It must be converted to floating point type Data to be processed. Otherwise the correct result can not be obtained.)

The Flow Chart of Software

PC-side image processing software is written by C # language as the flow chart shown in .First, the software obtains a picture from the two cameras. Then it does the image gray and binary processing and synthesizes the processed pictures into three-dimensional Images. After that, it calls the corresponding scan function to obtain the corresponding cutting instructions. Finally, it sends the result to the controller through the serial port.

Conclusions

The system designed in this paper can only cut the diameter of a regular object. For example, a cone or a part of a tetrahedron whose diameter is less than a certain value can be cut. The cut of the irregular diameter of the object can be ultimately completed by optimizing the PC-side image processing software algorithms in the following days. The three-axis drive cutting subsystem can also be adapted to a variety of applications by upgrading or changing the corresponding components. For example, the mechanical part of a 3D printer basically adopts three-axis drive system.

Acknowledgements

Funds for the research were provided by Jilin province university undergraduate science and technology innovation fund. National university undergraduate science and technology innovation fund (No.201510193043). Scientific research fund of Jilin Agricultural University（No.201620）.

References

[1] Tan Yuan-hua, Huang He-cheng, Tan Qing-chang, Shi Zhi-biao, Zhang Hai-bo, Huang Sheng-quan.Measurement of Parts Based on Machine Vision [J] .Laser and Optoelectronics Progress, 2010,01: 82-90. (In Chinese).

[2] Zhang Tanshun, Zhang Na, Wu Yuting.Research on Driving Bipolar Stepping Motor Based on Enhanced STM32 [J]. Electronic Measurement Technology, 2010, 10: 16-18 -55. (In Chinese).

[3] Zhang Bin. 3D print-driven key technology research [D]. Beijing Institute of Graphic Communication, 2015. (In Chinese).

[4] Ku Shao-ping, LIU Jing. Design of stepping motor control system based on STM32F10x and MDK [J] .Journal of Wuhan University of Technology, 2009, 03: 107-110. (In Chinese).

[5] Luo Xin, ZHANG Feng. Realization of linear speed control of stepping motor based on ARM Cortex-M3 [J]. Electric Automation, 2009, 05: 42-44.

[6] Wu Di. DRV8825-based printer motor drive circuit design [J]. Electronic Technology and Software Engineering, 2013, 11: 62.

[7] J. M. S. Prewitt and M. L. Mendelsohn, "The analysis of cell images," innnals of the New York Academy of Sciences, vol. 128, pp. 1035-1053, 1966.

[8] C. A. Glasbey, "An analysis of histogram-based thresholding algorithms," CVGIP: Graphical Models and Image Processing, vol. 55, pp. 532-537, 1993.