ATLANTIS PRESS
Advances in Computer Science Research, volume 44
3rd International Conference on Wireless Communication and Sensor Network (WCSN 2016)

Improvement in the Noise Characteristics of Optical Frequency Comb Based on Injection Locking

Jia-Xing Xie
School of electronic and information Engineering, Beihang University, Beijing, China
E-mail: 15010515963@163.com

***Abstract*-Radio over fiber (ROF) systems are attractive solutions for broadband wireless access network due to its capacity for supporting high speed data rate transmission. And optical heterodyning is a promising method to generate microwave signals used in radio over fiber systems. Beating of the different modes of an optical frequency comb can produce microwave signals of different frequencies. And improving the properties of the optical frequency comb by injection locking can lead to the improvement of the noise characteristics of the microwave signal. In Our experiment, a tunable laser was used as the master laser, and a distributed feedback laser was used as the slave laser. The frequency comb was produced by two cascaded phase modulators. By adjusting the wavelength of the master laser and the injection power, we achieved a 17dB improvement on the signal to noise ratio of the microwave signal.**

Keywords-injection locking; optical frequency comb; microwave; noise-signal ratio

I. INTRODUCTION

Microwave photonics is a cross disciplinary study of the interaction between microwave and optical signals. And it has a good prospect in the application of wireless access network, radar, satellite communication and so on [1]. With the growth of smart wireless devices and the Internet of things, the next few years, mobile data is expected to reach 24EB per month. In order to achieve such a high amount of data requirements, the use of the bandwidth to reach several tens of GHz millimeter wave is needed. For broadband wireless access network, radio over fiber are attractive solutions because they can support high speed data rate transmission and avoid the frequency band competition with current wireless communication devices [2]. And In the process of distributing data to a wireless base station, the optical fiber is a kind of transmission medium with many advantages, such as high bandwidth, low transmission loss, negligible interference and light weight, etc. And these advantages makes the research through the use of optical methods to generate microwave signal more and more interested in. The most common method is to generate microwave signal through the optical heterodyne method. Two light signals with different wavelength beaten by a photodetector and the frequency of the generated microwave signal equals to the difference of the two light signals. And optical frequency comb is a bridge that connects the microwave frequency band and the optical frequency band. And it is a kind of light source with equal frequency space spectrum. By beating of the different modes of the optical frequency comb, we can get microwave signals of different frequencies easily. And due to the high correlation between the phases of modes in the optical frequency comb, the microwave signal generated by the photodetector will have a relative low phase noise [3]. It is desirable for the applications described above to use optical frequency combs with high power of each modes and high signal to noise ratio. But due to the limitation of the bandwidth of the filter, it is very difficult to allocate and adjust a single mode of the optical frequency comb. But with injection locking we can simultaneously filter and amplify individual comb modes [4], and maintain the low phase noise at the same time.

II. EXPERIMENTAL PRINCIPLE

While using the optical heterodyning to generate the microwave signal, assume that the two optical signals are

$$E_1(t) = E_{01}(\omega_1 t + \varphi_1) \tag{1}$$

$$E_2(t) = E_{02}(\omega_2 t + \varphi_2) \tag{2}$$

In which E, ω and φ represent for the amplitude, frequency and phase. And the output current of the two optical signal through the photon detector is

$$IRF(t) = A\cos[(\omega 1 - \omega 2)t + (\varphi 1 - \varphi 2)] \tag{3}$$

In which I, A represent for the current of the output and the intensity of the electric field. As shown, the frequency of the output signal equals to the difference of frequencies of the two optical signals. Therefore, we can use different modes of the optical frequency comb to generate a microwave signal with frequency which is multiple times of that of the radio frequency signal, and with a relative low phase noise. For optical injection, there are two important parameters, the injection power and the frequency detuning, which is the difference between the frequency of the master laser and the slave laser. When the output of the master laser with different injection power and frequency detuning is injected into the slave laser, different effects will be emitted including four wave mixing, period-one oscillation and locking [5]. And for injection locking, there is another important parameter called locking range. When the frequency of master laser falls in the locking range, the wavelength of the slave laser will be pulled to the wavelength of the master laser and finally reaches the state that is equal to the wavelength of the master laser. Then the frequency of the slave laser is locked and the power of the master laser is amplified, as shown in Figfure 1.

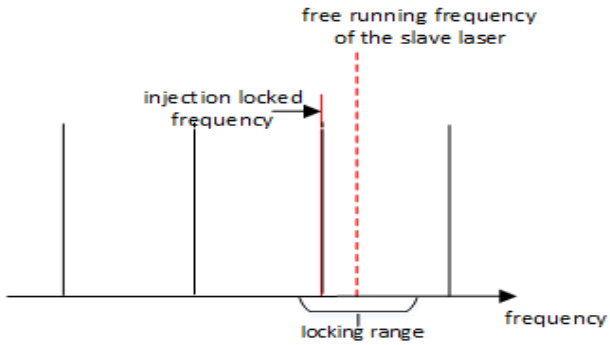

Figure 1. The slave laser was optically injection locked to a single mode of the frequency comb. And the slave laser will emit at the same frequency of the single mode.

III. EXPERIMENT SYSTEM AND RESULT ANALYSIS

In our experiment, we use a tunable laser as the master laser. Both of its power and wavelength can be adjusted, and the precision of its wavelength is 1pm. A distributed feedback laser (DFB) is used as our slave laser. Its wavelength is 1548.232nm, and its power can be adjusted by adjusting its working current.

Figure 2 shows the system of our experiment.

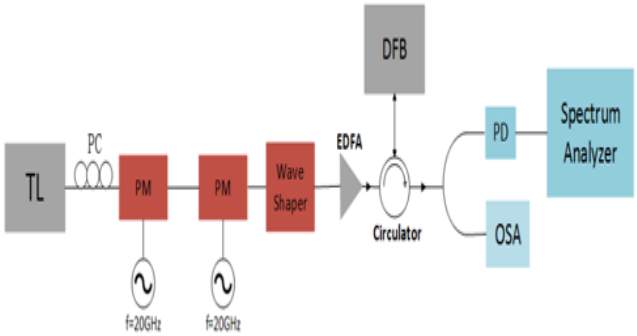

Figure 2. The system of our experiment, in which we use injection locking to improve the signal to noise ratio of the microwave signal generated by beating of two different modes of the optical frequency comb.

The output of the master laser is first modulated by two cascaded phase modulator to generate an optical frequency comb. Then the optical frequency comb goes to the wave shaper, and two modes with a frequency space of 40GHz will be filtered out. And the choice of frequency interval for 40GHz is mainly to take into account the actual demand. And then the two modes are injected into the distributed feedback laser through a circulator. When the signal after injection come out from the circulator, it will be divided into two channels by a coupler. And then one channel is directly linked to an optical spectrum analyzer for measuring the change of the optical spectrum. And the other channel is first linked to a photo detector and then the generated microwave signal is send into the spectrum analyzer.

Figure 3. shows the filtered sidebands of the optical frequency comb before and after injection. At this time, the current of the tunable laser is 6.98mA, and the injection power is 5.7μW. And the wavelengths of the sidebands are 1547.86nm and 1548.19nm, and the sideband with longer wavelength is used to optically injection lock the slave laser.

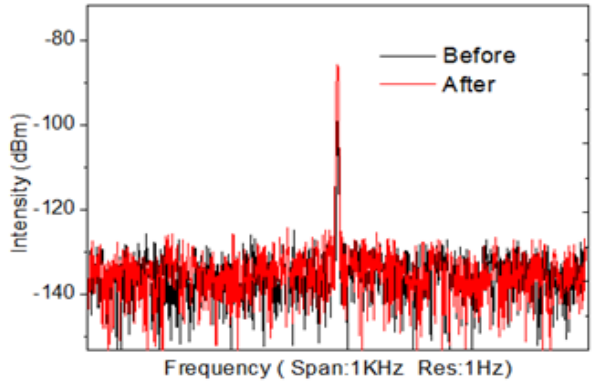

Figure 3. The filterted sidebands of the optical frequency comb.

In this figure the black line represents for the sidebands before injection, and the red line represents for the sideband after injection. As shown in Figure 3, the intensity of the sideband with longer wavelength increased about 20dB.

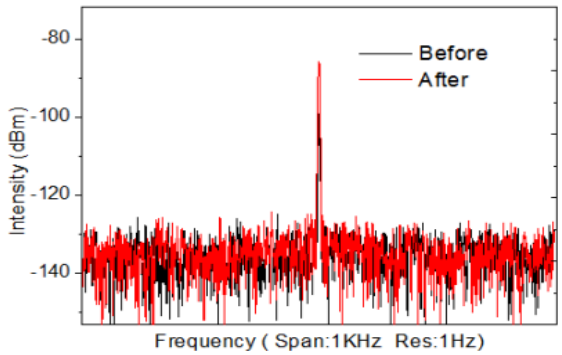

Figure 4. The spectrum of the microwave signal generated by the two sideband before and after injection.

And Figure 4. shows the spectrum of the microwave signal generated from the photodetector. The black line in this figure represents for the spectrum before injection, and the red line represents for the spectrum after injection. As we can see the intensity level of the noise remains almost the same but the power of the microwave signal increased about 17dBm, which means that the signal to noise ratio increased about 17dB.

And for reflecting the importance of the correlation between phases of the two optical signals which are beaten by the photodetector, we did another experiment, in which the output of the master laser was directly injected into the slave laser through a circulator and the injection parameters were adjusted to cause four wave mixing in the slave laser. Then the signal after injection was divided into two channels by a coupler. One channel was linked directly into an optical spectrum analyzer for observation of the optical spectrum of the signal. The other channel was first linked to a photodetector and then the generated microwave signal was linked to the spectrum analyzer.

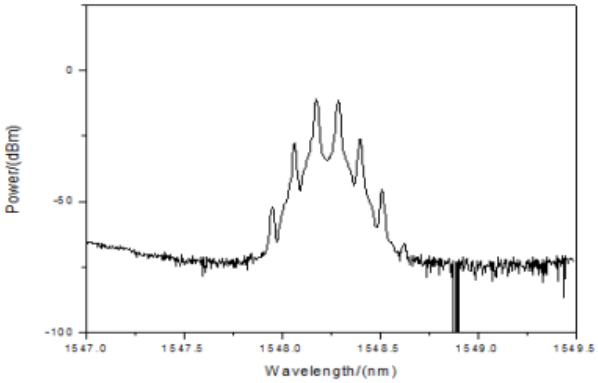

Figure 5. The optical spectrum of the four wave mixing signal.

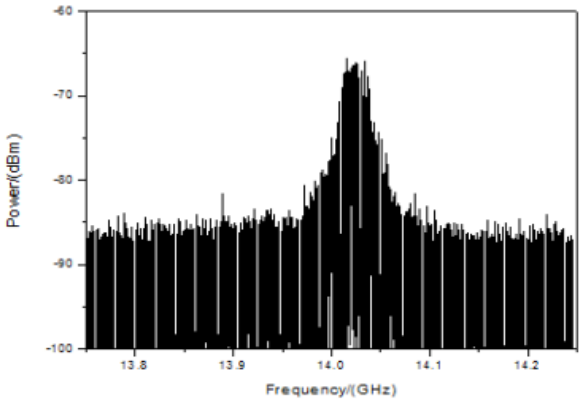

Figure 6. The optical spectrum of the four wave mixing signal.

We observe the optical spectrum as we adjust the wavelength of the master laser. When there are two principle modes and sidebands aside each of them, the slave laser is under the state of four wave mixing. At this time, the wavelength of the tunable laser was about 1548.19nm, which equals that of the tunable laser in our injection locking experiment. The output power of the tunable laser was 2dBm, and the power of the slave laser was about 3.63dBm. As shown in Figure 5. , the two principle modes are at the wavelength of the free running slave laser and the master laser. The first order sidebands aside are about 20dB weaker than the principles modes. And if without considering the correlation of the phases, we expect that the frequency of microwave signal generated by the photodetector equals to the difference of frequencies of the two principle modes. However, as we can see in Figure 6. , the spectrum was not a single frequency. And it is mainly because that the phases of the two principles are not related.

IV. CONCLUSION

When we optically inject the output of master laser into the slave laser, different injection conditions will cause different effects in the slave laser. In our experiments, we keep the difference between frequencies of the two lasers constant and adjust the injection ratio for compare. Under the state of injection locking, the spectrum of the microwave signal generated by beating is pure. And without increment of noise, the signal to noise ratio is increased about 17dB. But under the state of four wave mixing, the spectrum of the microwave signal is not a single frequency because the phases of the two principle modes are not correlated. And we can say that using injection locking with frequency comb can easily maintain the correlation between the phases of different modes, and increase the signal to noise ratio without increment of the relative low noise.

ACKNOWLEDGMENT

Here and now, I would like to extend my sincere thanks to all of the people who have contributed to this paper in some manner. Firstly, I am deeply grateful to my honorable tutor, Prof. Zheng Zheng, who with extraordinary patience and consistent encouragement and gave me great help by providing me with necessary materials, advice of great value and inspiration of new ideas. Then I pleased to acknowledge Dr. Liu Ya for that she have checked through my thesis with patience and given me instructive suggestions, and she also played an important role in indicating a bright road in my future writing. Finally, I am very grateful to my lovely friends and classmates who have offered me quiet situation to compose my thesis and discussed with me about my thesis.

REFERENCES

[1] J. Yao, "Microwave Photonics," in *Journal of Lightwave Technology*, vol. 27, no. 3, pp. 314-335, Feb.1, 2009

[2] Cheng Hong, Mingjing Li, Cheng Zhang, Weiwei Hu, Zhangyuan Chen and Anshi Xu, "Millimeter-wave frequency tripling based on four-wave mixing in sideband injection locking DFB lasers," *Microwave and Millimeter Wave Technology, 2008. ICMMT 2008. International Conference on*, Nanjing, 2008, pp. 876-877.

[3] Z. Tong, A. O. J. Wiberg, E. Myslivets, B. P. P. Kuo, N. Alic and S. Radic, "Linewidth preserved broadband parametric comb seeded by two injection-locked pumps," *2012 38th European Conference and Exhibition on Optical Communications*, Amsterdam, 2012, pp. 1-3.

[4] D. S. Wu, R. Slav k, G. Marra and D. J. Richardson, "Direct Selection and Amplification of Individual Narrowly Spaced Optical Comb Modes Via Injection Locking: Design and Characterization," in *Journal of Lightwave Technology*, vol. 31, no. 14, pp. 2287-2295, July15, 2013.

[5] Sheng-Kwang Hwang, Jia-Ming Liu and J. K. White, "Characteristics of period-one oscillations in semiconductor lasers subject to optical injection," in *IEEE Journal of Selected Topics in Quantum Electronics*, vol. 10, no. 5, pp. 974-981, Sept.-Oct. 2004.