ATLANTIS PRESS
Advances in Engineering Research, volume 118
2nd International Conference on Automation, Mechanical Control and Computational Engineering (AMCCE 2017)

Preliminary Study of Aesthetics in Electric Circuit Theory

Zhe Zhang[1, a *]

[1]North China Electric Power University, Baoding, China

[a]89678252@qq.com

Keywords: Electric Circuit Theory, Aesthetics, Teaching Method

Abstract. Just like natural science, aesthetics is a discipline that belongs to a branch of philosophy. It contains aesthetic categories and aesthetic consciousness. Since aesthetic feeling is universal, aesthetics can relate to all research areas. And furthermore, aesthetics can guide the researching and teaching of natural sciences. After years of development, Electric Circuit Theory has built a perfect disciplinary theory system, in which many aesthetic features can be found. In this article, I analyze aesthetic content of Electric Circuit Theory in three aspects: beauty of unity, beauty of symmetry and beauty of simplicity. And based on this, some teaching and learning advice are given.

Introduction

Aesthetics has existed since the ancient time. It is the subject of beauty, ugliness, lofty aesthetic categories, human aesthetic consciousness as well as the regular pattern of creating beauty. Aesthetics embarks from the aesthetic relationship between man and the reality, and takes art as the main object.

Plato, Plotinos and other ancient esthetics are inclined to think that beauty is an attribute of the object, so beauty is objective and ubiquitous. Therefore, although the main object of study of aesthetics is art, it is not limited to this. It extends to various fields[1].

This article firstly introduces the basic connotation of aesthetics, then expounds aesthetics in Electric Circuit Theory by three aspects: beauty of unity, beauty of symmetry and beauty of concision. At last, some advice is given to improve the Electric Circuit theory teaching process.

Aesthetics in Electric Circuit Theory

Beauty of Unity.

The method to study Electric Circuit Theory is called model analysis method. We first establish appropriate idealized mathematical models for different kinds of actual circuits, then we quantitatively analyze the problem abstracted by the model and get determined solutions of the model. All the theory is constrained by the charge conservation law and the energy conservation law, from which we can get the Kirchhoff's current law(KCL) and the Kirchhoff's voltage law(KVL). Conservation is the highest level of beauty of unity in Electric Circuit Theory[2].

When studying some complex circuit models, we can hardly get the solutions only by KCL, KVL and the model of electrical components, so we need to find some common laws to make it easier to solve the model. And Electric Circuit Theory is actually the integration of all the common laws. It can help you get the parameters of circuits and explain the operation of circuits. And this shows the beauty of unity.

Beauty of Symmetry.

Symmetry is a basic geometric element and a basic aesthetics element. There are many symmetrical phenomena in structure, energy flow, parameters and laws in Electric Circuit Theory.

Sometimes, to achieve certain functions, we need to create circuits with symmetrical structure. For example, as the picture 1 shows:

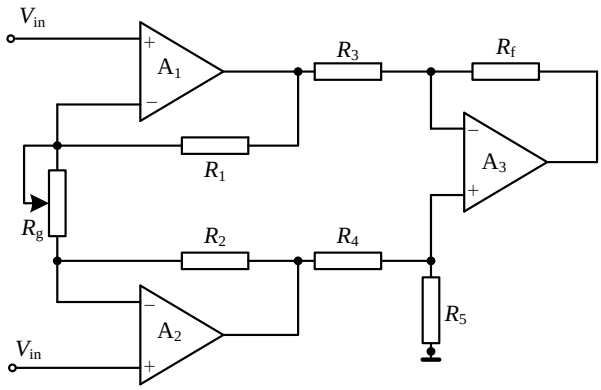

Fig. 1 Typical Structure of Instrumentation Amplifier

Fig. 1 shows a typical structure of instrumentation amplifier which has a typical symmetrical circuit structure. The input of the circuit is fully symmetrical, which makes the amplifier has advantages like high common mode rejection ratio(CMRR), High input impedance, low noise, low linearity error, low offset voltage and drift and low input bias current. So, it is widely used in many fields.

The symmetry of circuit structure can usually make things easier in the process of analyzing circuits. It can simplify the problem and even solve problems that seem very complicated. Here is an example.

In the symmetrical circuit shown in Fig. 2 (a), the resistances between the two ends of a and b are equal. To figure out the equivalent resistance between a and b, we do equivalent transform according to the symmetrical structure of the circuit. The process is showed in Fig. 2(b), and Fig. 2(c). And finally, we can get the equivalent resistance is 2/3R.

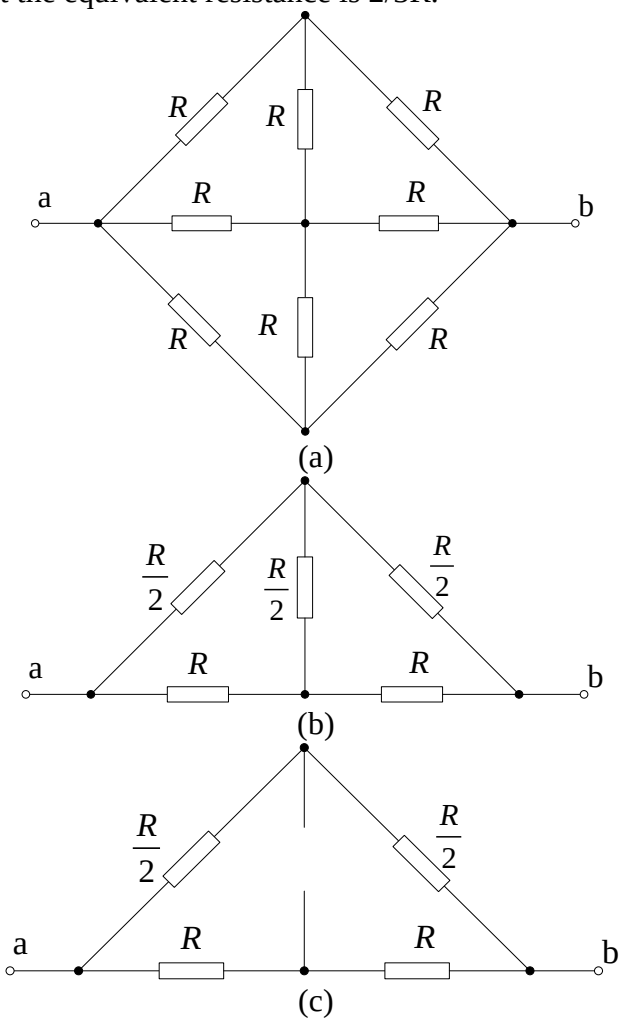

Fig. 2 Simplifying circuit by Symmetry

Beauty of Concision.

Many complex contents of the electric circuit theory can be summed up as regular things. To unify the seemingly unrelated things not only meets the needs of people's academic research, but also meets people's inner pursuit of concise beauty.

The actual circuit consists of two elements: the electrical components and the connection of them. In the mathematical model of the circuit, the connection of the electrical components is abstracted as the distribution of points and lines in space, and the electrical components are abstracted as the relationships that belong to its physical parameters. This kind of freehand way of abstracting electrical components is similar to abstraction painting depicts complex objects with simple lines, they both simplify the complex things and have beauty of concision.

In the process of analyzing the circuit, the complex circuit can always use a simple equivalent circuit or algebraic expression to represent, making the analysis clearer. Fig. 3 shows the simplification of complex circuits.

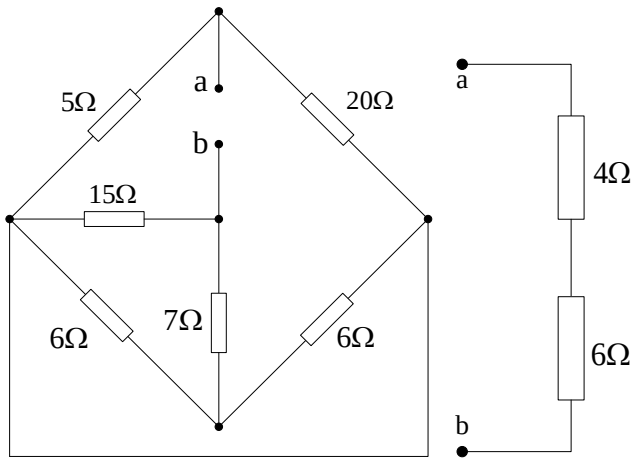

(a) (b)

Fig.3 Equivalent Circuit Simplification

The complex circuit of Fig. 4 can be simplified using the node voltage method to obtain equation (1). Making the complex circuit only three simple equations can express the voltage and current relations, simple and clear.

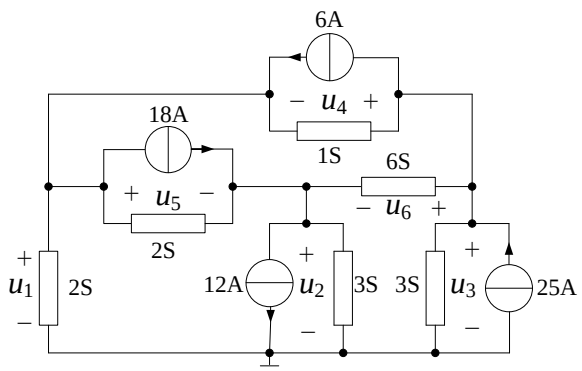

Fig. 4 A complex circuit

$$\begin{cases} 5u_1 - 2u_2 - u_3 = -12\text{V} \\ -2u_1 + 11u_2 - 6u_3 = 6\text{V} \\ -u_1 - 6u_2 + 10u_3 = 19\text{V} \end{cases} \tag{1}$$

Advice for Circuit Teaching

The Czech educator Comenius says, “The artistry of the educators is able to enable students to learn knowledge and skills thoroughly, quickly and happily." Teaching skills and art is to enable students to obtain knowledge and constant pursuit of truth, and let them explore and understand the

objective world with a strong emotional color. So, in the teaching process of the circuit, students should be guided to explore the knowledge, to find the aesthetic meaning of the circuit[3].

Conclusion

Aesthetics is an ancient discipline, which is a branch of philosophy like the natural science. So aesthetics have universal applicability in natural science, which can not only help the researchers keep improving the theoretical system, but also guide the teaching of theories. In the teaching process, teachers should show the aesthetics of circuit to the students to stimulate their desire to learn. What's more, teachers should also guide students to discover the beauty of circuit to improve their ability to accept knowledge.

Reference

[1] Hu Shengcai, and Dong Hua. "Aesthetics of circuit theory." Science and Technology Guide 34 (2015): 43-45.

[2] Wu Xian Shan. On "symmetrical beauty" [J]. Humanities Journal, 1989 (6), 44-44.

[3] Tong Jufang. Middle school physics teaching and aesthetics of the combination of [D]. Shanghai Normal University, 2008.