Advances in Engineering Research (AER), volume 130
5th International Conference on Frontiers of Manufacturing Science and Measuring Technology (FMSMT 2017)

Research on Train Operation Control System Based on Centralized Vehicle Computing

Xu Jing [1, a], Peng Shangkun [2,b] and Sun Junguo [3,c]

[1] Beijing Smart-Chip microelectronics Technology Co., Ltd.

[2] China Nuclear Power Engineering Co., Ltd.

[3] Traffic Control Technology Co., Ltd.

[a]Xujing@sgitg.sgcc.com.cn, [b] forflight@qq.com, [c]celesun@139.com

Keywords: centralized vehicle computing system, centralized train management, train operating control system.

Abstract. The Communication Based Train Control system (CBTC)system controls the operation of the train by calculating the moving authorization for all the trains running on the line through the Zone Controller (ZC, for short) arranged on the ground. The centralized vehicle computing system does not need to arrange the equipment in the ground, and could achieve tracking control through the communication between the vehicles. Therefore it realize a new generation of train control system with advantage on the cost, performance, and reliability. In this paper, a detailed analysis of the centralized train management in the train control system based on centralized vehicle computing is analyzed, and also the system principle & structure and the main control scheme are described, including the establishment and exit of the control vehicle, the switching scheme of the control vehicle, the train fault degradation, and the multi-control vehicle problem.

Background

(1). The existing train operation control system based on ground computing centralized - CBTC

The CBTC train control system calculates the train speed protection curve according to the train position, the track device state and the line speed limit, and protects the train according to the speed protection curve. In CBTC, the track device state and the line speed limit is fixed, but the train position is changing, so train tracking distance control is the core and difficulty of the system.

In CBTC, the train tracking control related equipment includes the vehicle on-board controller (VOBC), the zone controller(ZC), the computer interlocking（CI）, the rail side equipment and the communication equipment and so on. ZC is arranged in the station to calculate the moving authorization for all trains running on the line, the vehicle is operated according to the moving authorization(MA) to control the train running speed 1.

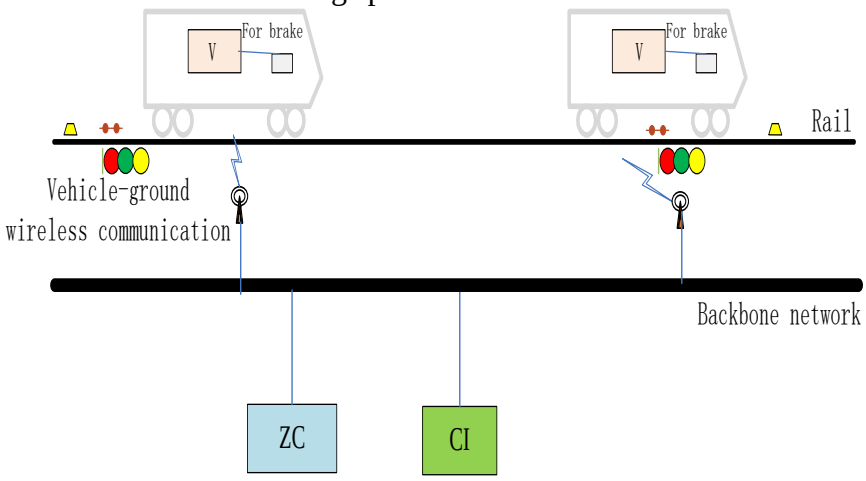

The current structure of the CBTC system

(2). Train Operation Control System Based on Vehicle Computing Centralized

With the development of communication technology and control technology, a kind of train control system with vehicle computing centralized appears and is applied to practical engineering project3. The system does not need to arrange the ZC on the ground, but direct exchange data between the trains, obtain the front train position, and ground speed limit equipment status information from the CI or ground interface equipment, calculate the train speed limit 4.

Moving authorization is calculated by the train, so it reducing the delay between communication and system interaction, improving the real-time performance of the system, and supporting higher train operating density. It does not need to deploy ZC equipment on the ground, reducing construction and maintenance costs. As the train can be spare, it improves system reliability.

Train Operation Control System Based on Vehicle Computing Centralized, breaking the previous ground-based control mode, turn to vehicle on-board centralized control mode. There are two kind of schemes for the calculation of the moving authorization, one is to calculate the moving authorization by each train itself, the other is to select a train from the trains as the supervisor control vehicle for centralized control of a certain area. In the former scheme, every train controls itself, which is not conducive to the cooperation between the trains, and there is a problem of information consistency between the multiple vehicles. This paper mainly describes the train centralized control scheme, describes the architecture and principle, and explains the control vehicle building and switching process, and analyzes the existing problems.

System Principle and Structure

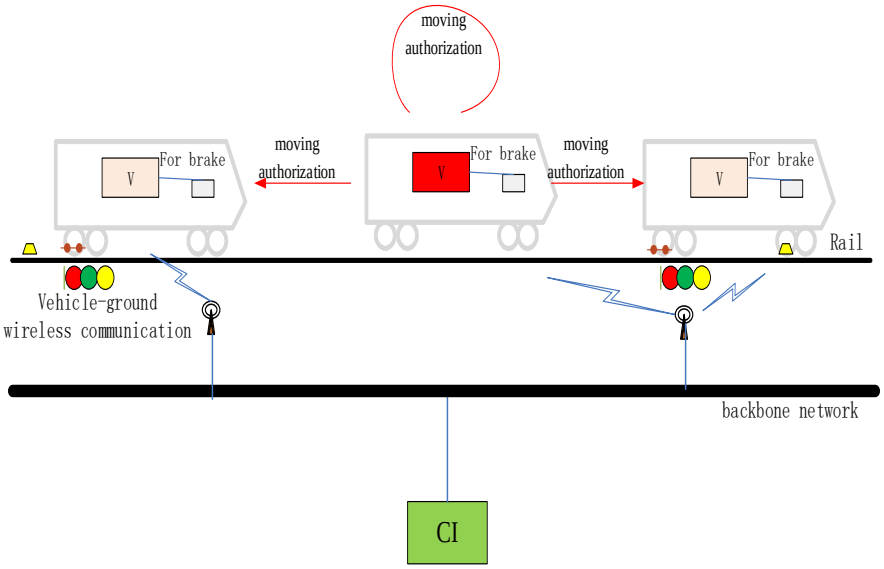

The system structure based on centralized vehicle computing

In the train tracking control system with the vehicle calculation as the core, there is no need for the ZC, and the train tracking interval control is realized through the communication between the trains. Regarding a running train on the line as the main control vehicle, and the system make the other trains as the controlled vehicles. By the communication between the control vehicle and the other controlled vehicles on the line, the train information such as the location and order will be confirmed automatically with the help of the car information. By the communication between the control vehicle and the interlock, the train speed limit equipment status is got. Therefore, the control vehicle could calculate the current moving authorization for each controlled vehicle running on the line and send the message to the controlled vehicle. Each train will calculate the EBI based on the moving authorization sent from the control vehicle and perform the over-speed protection on the train.

In order to reduce the calculation pressure of the main control vehicle, the line can be divided according to the area, and each area will be controlled by one specific control vehicle. Each control vehicle itself is a controlled vehicle on the line and will be controlled also.

The Management of the Main Control Vehicle

In the vehicle-based centralized train trajectory control system, the control method of the control vehicle for the controlled vehicle is the same as that of the existing CBTC system. The core issue is due to the change of the control subject, the establishment of the main control vehicle, cancellation and switching, and the control switching problem.

(1). The Establishment of the Control Vehicle

Before the train enters a certain area, it will send a query request to all trains on the line. Other trains will answer towards to the train after receiving the inquiry request. When the train receives all the reply about the inquiry requests, the system can determine whether there is a main control vehicle in the current area.

If there is already a main control vehicle in the current area, the current train is set as the controlled vehicle mode. The controlled vehicle communicates with the control vehicle and controls the operation of the train according to the moving authorization transmitted by the control vehicle. If there is no control vehicle in the current area, the current train is upgraded to the main control vehicle.

Under normal circumstances, the first column of the train that is getting into a region will be upgraded to the main control vehicle in the case when no control vehicle is queried, the other trains will run as a controlled vehicle.

(2). The Cancellation and Switching of the Control Vehicle

When the train is out of operation, it can no longer be used as a control vehicle to control the trains online. At this point the system needs to log off and switch the main control vehicle.

The main control vehicle will choose an alternative host vehicle from the controlled vehicles. When the control vehicle sends message to all the controlled vehicles and after all the controlled vehicles receive the message, the main control vehicle switching process will be started. When the switch is complete, the control vehicle is canceled, and the new control vehicle will begin to use the new moving authorization while the former moving authorization will be cancelled.

During the switching process, the main control vehicle is working properly until it is canceled. In the conversion process, the main control vehicle and the quasi-master vehicle work at the same time to calculate the moving authorization, the controlled vehicle may receive message from the main control vehicle or the quasi-master vehicle, because any moving authorization is safe so the controlled vehicle can run according to any moving authorization. After the switch is completed, the train will use the new control vehicle's moving authorization, and will no longer use the original one.

(3). Control Switch When the Controlled vehicles Change Its Area

When entering a different area, the controlled vehicle will accept the control from another control vehicle. So before the train entering into another main control area, it will apply for control in advance. Without the permission for application from the new control area, the train will not be able to enter into the new area.

There will be fixed demarcation point and co-management area between two adjacent control areas. The hand-over and take-over of the main control vehicle is processed together by two main control vehicles by exchanging the segment information and train information in the co-management area. The co-management status of the train begins when the train safety front position entering into the co-management section and ends after the train safety rear position getting out of the co-management section. The train completes the switch of the main control vehicle in the co-management area.

The Difficult Problems of the System

(1). Train failure degradation

①control system failure of the main control vehicle.

The failure of the control system of the main control vehicle will result in the degradation of all the trains in the area, resulting in operational accidents. So the same area can be designed with two vehicles as the control vehicle which will run in the main-standby mode. When the active vehicle fails,

the other vehicle will immediately use the backup control vehicle to calculate the moving authorization, so as to prevent the impact to other train caused by the host vehicle failure of the train. If there is only one train in the area, there will not be a standby control vehicle.

Due to the mobility of the train which is easier to maintain, the overall reliability of the system is much higher than that of the ground-based train operation control mode.

②non-master vehicle degradation

Non-master vehicle degradation will only have an impact on the vehicle itself. When there is a failure on the controlled vehicle, it will be downgraded to non-communication vehicle, running in the non-communication vehicle operation mode.

According to the ground arranged secondary testing equipment, mixed with the communication vehicle running.

(2). Multi-master control vehicles problem

As the production of the main control vehicle is generated by the train, due to the delay of communication, the system may produce some multi-master control vehicles at the same time to control a region.

In order to solve this problem, the system use a third party equipment which can be a train or a ground equipment as the ruling body, when the ruling machine finds that there are two or more control vehicles in the same area, immediately through the decision, it will choose one A train as the main control vehicle, and send messages to the other host vehicles to stop sending control instructions.

Conclusion

It is a new generation of train control system which is not necessary to arrange the equipment on the ground, and the system has the advantage of cost, performance and reliability. Because the change of the control mechanism of this system, concurrent control and distributed control theory is required to realize the complex control system. This paper offers a new guiding ideology for the next step to realize the system by analysis of the system scheme, principle, and structure and also the establishment & log-off of the control vehicle.

Acknowledgements

Beijing Science and Technology Commission project "research on train control system based on vehicle-vehicle communication (Z161100001016008) " provides funding.

References

[1] Gao Chunhai. Subway Train Operation Control System Based on Communication. Modern Urban Transit. 2007(2):7-10

[2] Tang Tao, Gao Chunhai, Li Kaicheng. Strategic Discussion on Train Operation Control Technology. Urban Rapid Rail Transit. 2005, 18(6):25-29

[3] Wu Shuxue. First Commercial Application of the Concise Alston CBTC Technology in the French City of Lille. Railway Signalling & Communication Engineering. 2013, 10(5):107-108

[4] Xu Jikang. New CBTC System Analysis Based on Train-Train Communication. Railway Signalling & Communication. 2014,50(6):78-80

[5] Dai Jilong, Li Xiaogang, Li Zhaoling. Research on the New Generation CBTC System and the Exploration of Key Technologies. Railway Signalling & Communication Engineering. 2016, 13(6)