Advances in Computer Science Research (ACSR), volume 61
7th International Conference on Education, Management, Computer and Society (EMCS 2017)

Optimization of Double-Rows Sugarcane Harvester Channel Hydraulic System

Liping Xu[1, a] and Liujin Cai[1, b*]

[1]School of Mechatronic Engineering, Henan University of Science and Technology, Luoyang, 471003, China

[a]xlpzz@163.com, [b]yycailj@163.com

*The corresponding author

Keywords: Sugarcane harvester; Energy conservation; AMESim, Hydraulic system optimization; Power matching

Abstract. The traditional double-rows sugarcane harvester channel hydraulic system adopt constant pump bypass throttle to realize the speed control of motors, which produces a lot of power loss during working in the field. Aiming at solving this problem, the system optimization method of variable pump controlled variable motor speed control circuit was proposed. Through working condition analysis and AMESim modeling and simulation, the power loss of the two kinds of system was compared to determine the channel wheel speed control using variable pump controlled variable displacement motor speed control. Finally, the harvesting experiment was launched to verify the performance optimized system. The result shows that the rotational and walking speed of each wheel group of the channel system can be matched reasonably, which not only improves the quality and efficiency of sugarcane harvesting but also reduces energy consumption and realizes energy saving.

Introduction

Channel hydraulic system of sugarcane harvester is very important in the whole system, each group of wheels in the channel, the speed and walking speed is the key, directly affects the quality and efficiency of sugarcane harvesting. The reasonable speed control loop can make full use of the system power, greatly reduce energy consumption, energy saving. Therefore, it is necessary to optimize the design of the loop speed control mode, so as to make the power matching load change. This paper analysis and AMESim modeling and simulation based on pump controlled bypass throttling speed control circuit and control variable pump variable motor speed control circuit two, the volume control circuit power more fully utilized. At the end of the channel closed loop field test and sugarcane harvesting tank temperature detection, verify the correctness of the simulation results, which provides a reference for the study of two line channel hydraulic system of sugarcane harvester.

Harvester Channel Hydraulic System

Sugarcane harvester channel system in the process of operation, complete stripping leaves, leaf and cane to the hopper output action according to the order, the actuating mechanism comprises a shell, impeller impeller group group and the output wheel group, the harvester channel is shown in Fig. 1. In order to reduce the cost and reduce the structure of the system, the motor is divided in series with the motor, the motor and the output motor.

In actual operation, the harvesting conditions are complex, and the coordination between the hydraulic systems is particularly important. If the speed of each part does not match the sugarcane congestion in the tunnel, causing channel blocking phenomenon; if the channel motor speed is too high, will be interrupted, sugarcane stripping impeller crack, resulting in loss of sugar; if the motor speed is too low, the efficiency is too low, so the motor speed with walking speed.

According to the operation experience, the speed of the best harvesting effect is 4km/h, and the

speed of the motor is 720r/min, the speed of the motor is 500r/min, and the output speed is 900r/min. In this paper, the optimal control system is analyzed.

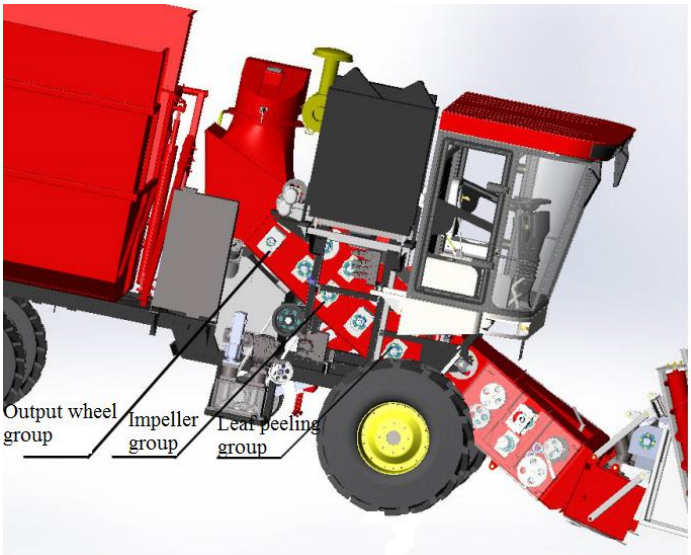

Figure 1. Harvester channel diagram

AMESim Modeling and Simulation of Channel Bypass Throttle Speed Regulation Hydraulic System

The AMESim software is used to model the traditional closed loop bypass throttle speed regulation system, and the pressure, speed and power matching of the system is simulated.

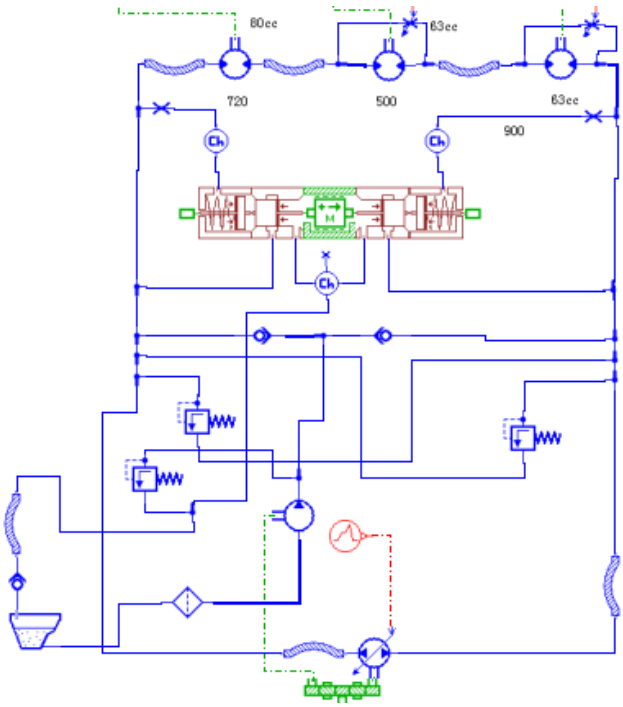

Figure 2. Closed loop bypass throttle speed regulation circuit

The loop simulation model is shown in Fig. 2, by adjusting the engine speed regulating pump output flow, the overall control of all motor speed, two manual throttle valve is respectively connected with the branch leaf motor, parallel motor output, through the opening of the throttle valve to flow through the shunt motor, control the speed of the motor. The closed two-way pump control motor rotation direction.

During the working process, the peeling blade of the impeller is driven to rotate, and the sugarcane leaves are peeled off by the effect of the surface of the sugarcane. During this process, the leaf brush periodically and sugar cane friction, while other miscellaneous interference. Therefore, in order to get more accurate simulation results, the random fluctuation signal is added to the motor load simulation signal. The working status of the motor and the output of the motor and the leaf peeling motor is similar, just type transfer mechanism of wheel group is different, so the analog signals with the same loading and stripping leaves motor, according to the actual working conditions set motor load. The load loop and load are shown in Fig. 3.

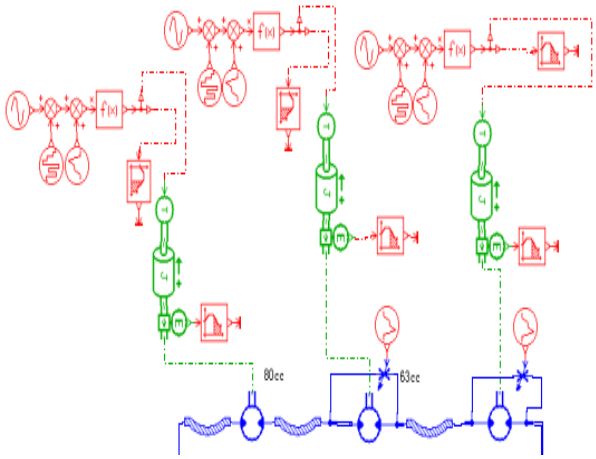

(a) Hydraulic simulation loading circuit

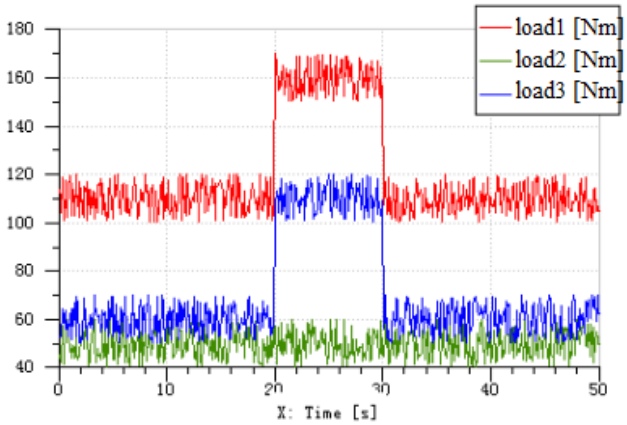

(b) Hydraulic motor loading amount

Figure 3. Hydraulic motor analog loading circuit and loading amount

According to fig. 2, the pump displacement in the loop is 50mL/r, the speed is 1200r/min, the displacement of the three quantitative motors are: 80mL/r, 63mL/r, 63mL/r, the target speed of the motor are: 720r/min, 500r/min and 900r/min.

Without considering the volume loss, hydraulic pump and motor mechanical loss and line loss under the condition of channel close hydraulic calculation step is 0.1s, the total time for the 50s simulation, get the loop motor speed as shown in Fig. 4.

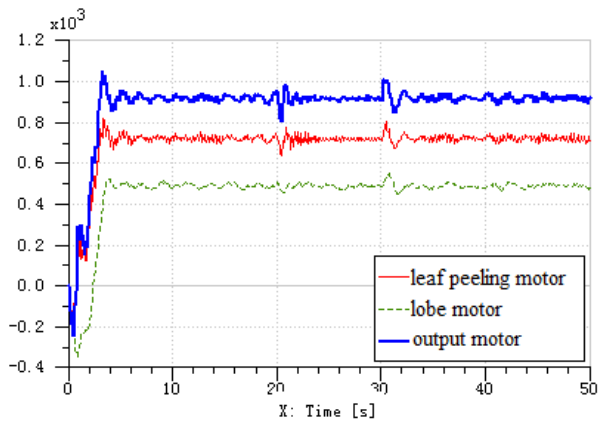

Figure 4. The diagram of motor speed

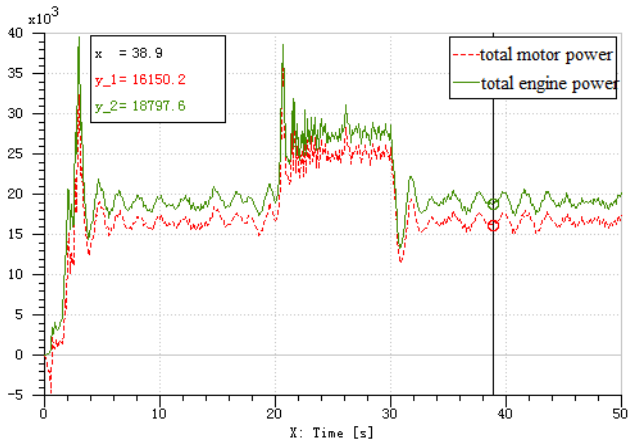

Figure 5. The diagram of system power

Throttle valve speed control can be a good control of the motor speed, less affected by the load, you can achieve the design needs. But in the process of high voltage motor, there is a large amount of energy loss in the throttle valve, and the power of the system is shown in Fig. 5. Such as 38.9s, power loss of 2.6kW.

In order to reduce the energy loss in the system and make full use of the power, the hydraulic circuit of Fig. 2 is optimized using variable pump to control variable motor.

AMESim Modeling and Simulation of Proportional Pump Control Motor Speed Regulation Circuit

The energy loss volume control system is not because of the throttle and the system flow and pressure to follow the automatic load regulation, the motor needs much traffic, you can adjust the displacement of variable pump, motor supply required flow. Therefore, variable pump and motor can be adjusted according to their work needs within a certain range of output characteristics, with significant energy saving effect. The schematic of modified channel system is shown in Fig. 6.

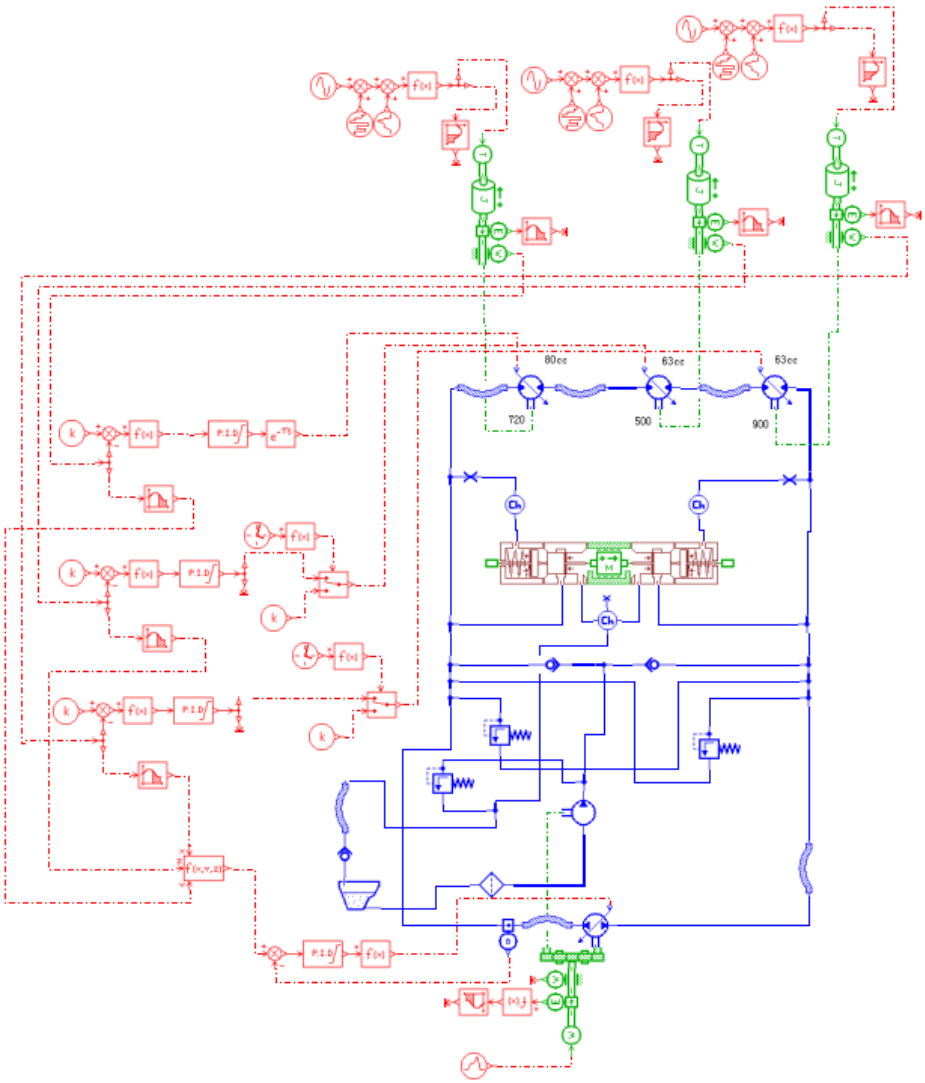

Figure 6. AMESim simulation loop of variable pump to control variable motor

The quantitative pump will be changed into a proportional variable pump, the motor will be changed into a proportional variable motor, the variable displacement motor and variable displacement pump control system. According to the operation experience of establishing the vehicle running speed and the motor speed, channel data table, the actual operation control system can detect vehicle speed, speed, according to the data table, sends out the control command, the PID control algorithm is adopted to automatically adjust the pump displacement and three displacement motor, a closed-loop control channel to control the speed of the wheel set. In order to simplify the simulation, select the simulation data of the motor speed in Fig. 3, without considering the efficiency and loss of the components, the 50s simulation of the circuit, the motor speed and power system diagram are shown in Fig. 7 and Fig. 8.

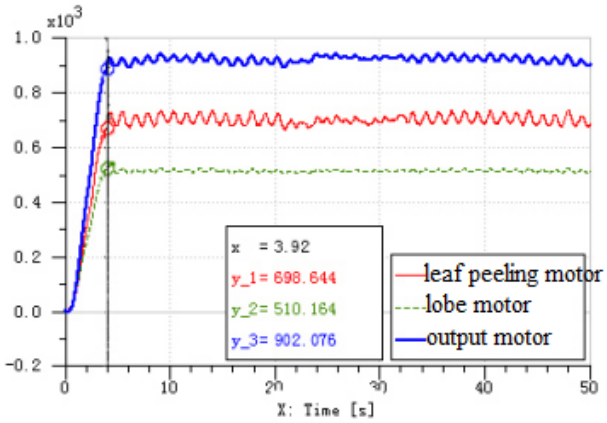

Figure 7. The diagram of motor speed

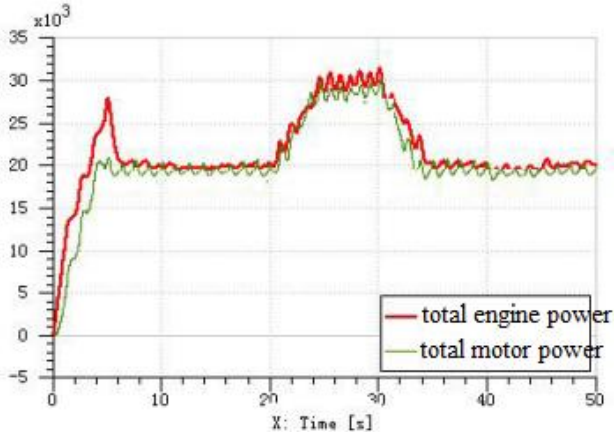

Figure 8. The diagram of system power

From Fig. 7, the rotation speed of the motor can be basically stable in 720r/min, 500r/min and 900r/min, and the speed fluctuation ratio of bypass throttle speed control to small fluctuations, the response speed is less than 4S, the loop disturbance, can meet the control requirements of sugarcane harvesting operations. Compared to the bypass throttle speed control circuit, the speed regulation of the volume control circuit is more convenient and accurate, the speed range is wider, and the stepless speed regulation can be realized.

The total power of the pump in Fig. 8 can follow the total power required by the three motors; the power loss is reduced to less than 1kW, compared with the bypass throttle speed regulation power loss, reduced by 60%.

Optimization Test of Hydraulic System of Harvester Channel

In order to verify the simulation results of the closed loop speed control system of the variable displacement pump variable motor, the sugarcane harvest experiment was carried out in Guangxi farm. The experimental results are shown in fig. 9.

Figure 9. The picture of test site

The environmental temperature of 30 degrees, the continuous harvest for about two hours, check the effect of sugar cane harvest and the detection of tank temperature, the tank temperature can indirectly reflect the power loss of the system. Harvested from the field results, channel work no blocking phenomenon, no peeling rate is less than 10%, the qualified rate of more than 90% segments. The temperature rise has decreased from 80 to about 53 DEG C, and the cooling effect is obvious.

Summary

Based on the throttle valve bypass loop and speed variable pump control variable displacement motor speed control circuit of the two hydraulic system form analysis of AMESim simulation, power loss comparison system, PID parameter setting optimization of the closed loop control system, such as channel optimization of speed variable pump control motor and variable. The sugar cane harvest test, the test results proved the correctness of the simulation results. The hydraulic speed and walking speed of the hydraulic system can be matched reasonably, which can improve the quality and efficiency of sugarcane harvest, reduce the energy consumption and realize the energy saving. This paper provides a reference for the research of the hydraulic system of the whole rod combine harvester.

Acknowledgements

The authors gratefully acknowledge natural science foundation of Henan University of Science and Technology for financial support of this research work.(2015QN017)

References

[1] J. Hou: Study on the Competitiveness of Sugarcane Industry in Guangxi Autonomous Region

[2] (MS., Guangxi university, China 2012), p.12. (In Chinese)

[3] Z. P. Wang: China Biotechnology, Vol. 29 (2009) No.8, p.103. (In Chinese)

[4] Z. Liu: Reform & Opening, (2011) No.6, p.78.(In Chinese)

[5] Y. L. Fu: Study on Power Matching Energy Saving of Sugarcane Combine Harvester (MS., Guangxi university, China 2008), p.15.(In Chinese)

[6] X. P. Su, G. Yang: Fluid Power Transmission and Control, (2011) No.2, p.126. (In Chinese)

[7] H. F. Wang, Z. H. Zhou, C. L. Zhang: Journal of Chongqing Jiaotong University (Natural Sciences), Vol. 32 (2013) No.5, p.106. (In Chinese)

[8] Z. Y. Huang, X. H. Li, M. Chen: Construction Machinery, (2004) No.4, p.18.(In Chinese)

[9] W. T. He: Brick & Tile World, (2008) No.6, p.68. (In Chinese)

[10] Y. L. Wang, Q. X. Zhao, P. X. Yao: Chinese Hydraulic & Pneumatic, (2015) No.3, p.47.(In Chinese)

[11] T. T. Li: Research on Constant Speed Control System of Electro-hydraulic Proportional Variable Pump and Motor (MS., Changan university, China 2004), p.32.(In Chinese)