ATLANTIS PRESS

Advances in Engineering Research, volume 138

2nd International Conference on Machinery, Electronics and Control Simulation (MECS 2017)

Optimized Design for Supervisory Control Platform of Unified Time System of Survey Vessels

Hongyuan Liu

China Satellite Maritime Tracking and Control Department, Jiangyin 214431, China

SDLHY123@163.com

Keywords: unified time, supervisory control platform, optimized design, Trap, message queue.

Abstract. This thesis briefly introduces the role of the supervisory control platform of unified time system of survey vessels, and studies thoroughly the design and composition of the supervisory control platform, and then finds out the existing defects for which the cause is that to avoid the interplay between two threads: buffer and packet transmission, when the protection lock for Trap message queue is null, the abnormal access of the pointer occurs, leading to the shutdown of Trap message transmission thread and the SNMP thread, and the monitoring module's failure to respond to the requests from software. This paper elaborates the optimized and improved design for the supervisory control platform. By changing signal variable, the optimization of the system platform, especially the revising of the defects could be accomplished. And, by actual use, the feasibility of optimization and improvement is verified, therefore, the reliability of supervisory control platform of unified time system is enhanced, and it could provide reliable monitoring guarantee for the stable operation of the system. This design has high application value, and could be widely used.

1. Introduction

Unified time system of survey vessels provides standard temporal information and standard frequency signal for the space test facilities of the whole vessel, to ensure the unification in time and frequency of the whole pilot system [1]. With the rapid development of space tracking, telemetering and command, unified time system is of greater significance, and the stability and reliability of the system devices need to be monitored, controlled and managed by a more competent supervisory control platform [2].

Although the current supervisory control platform could monitor, control and manage devices status, it is still not fully functional, with some problems in it. Therefore, to monitor, control and manage better the unified time devices, solve the existing problems during application, and perfect the functions of the supervisory control platform of the unified time system, it is of great significance and necessity to optimize and improve the design of the platform.

2. Application Status Quo of Supervisory Control platform of Unified Time System

During the operation and use of the devices, the main problems of the supervisory control platform are as below:

(1) Time on the supervisory control software interface freezes. During operation, time on the monitoring interface stops going repeatedly. Therefore, with no current time displayed, the correctness of temporal information could not be achieved.

(2) The "Remote Control" function of the supervisory control software could not work normally. During the operation of the software, the parameter of the controller and generator could not be set, so that the "Remote Control" function is unable to work normally [3].

(3) The unified time controller devices are shown as "offline". During the operation of the supervisory control platform, the abnormal phenomenon of unified time controller "offline" occurs on the main interface of the controller, while the test monitoring computer is connected normally with the network of the SNMP module, and the controller itself functions well.

(4) The SNMP monitoring module is “offline”. The SNMP monitoring module is shown as “offline” on the supervisory control software. At the meantime, the supervisory control software could not receive the status information of the unified time devices, and it could not monitor the temporal information of the unified time system and the devices status.

Through statistical induction on the problems of the supervisory control platform, it is found that the unscientific design of the supervisory control software, and the defects in the function of the supervisory control platform of the united time system lead to the problems.

3. Analysis of Supervisory Control Platform

Supervisory control platform is an important component of the unified time system of survey vessels, responsible for supervising and controlling real time status of the unified time system control module, generator module, rubidium atomic frequency standard and time server. And, it could set important parameters of the generator module and control module.

3.1 The Components of Supervisory Control Platform

The supervisory control platform is composed of the SNMP module, monitoring and network management computer, and supervisory control software, etc. The main role of the SNMP monitoring module is to provide interfaces for the connection between unified time system devices and monitoring computer, including R145 and CAN bus test interfaces [4]. Monitoring and network management computer is installed with the unified time supervisory control software, responsible for monitoring log and the storage of system operation data, and it also maintains and manages all the unified time devices. Supervisory control software provides functions such as: monitoring operation and status of unified time devices, parameter configuration and information search, etc. which could realize the monitoring and management of the unified time devices [5].

Monitoring interface module is the monitoring and management channel of the unified time devices, composed of circuits like microprocessor, interface conversion, network interface, RS232 interface, CAN bus interface, etc. as is shown in the figure 1. The module could connect with network management through network interface, supporting the SNMP network management protocol.

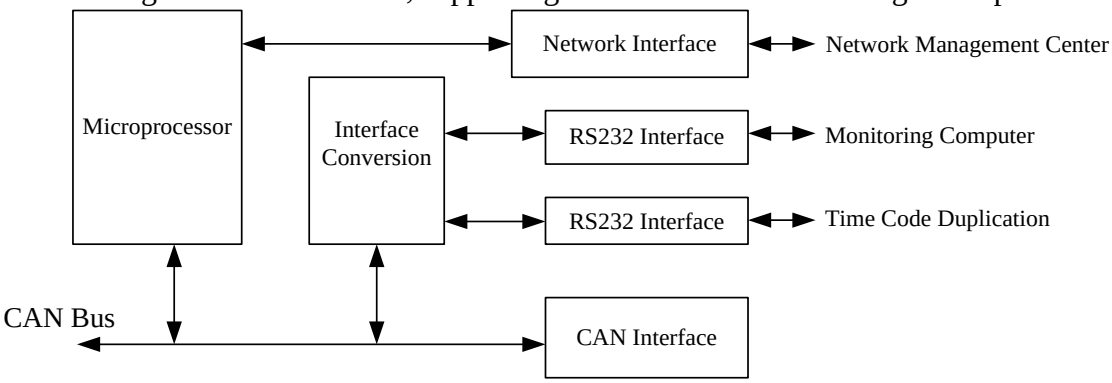

Fig. 1 Functional Block Diagram of Monitoring Interface

The SNMP monitoring module consists of circuits such as power circuit, network interface circuit, communication interface, etc. RJ145 interface in the SNMP monitoring module is the main channel of network management, and the protocol type is the SNMP. CAN interface, as a standby interface, could be connected by devices with CAN bus which could control in along-range the unified time devices. The functional block diagram is shown in figure 2.

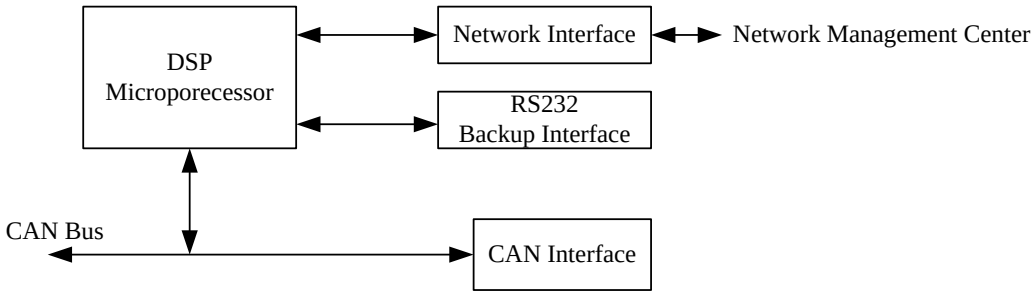

Fig. 2 Schematic diagram of monitoring module

The function of network interface circuit is to transmit and receive the SNMP data packet via hardware, uploading the whole unified time devices status to the monitoring computer, or setting and operating the devices, such as unified time controller, etc. through monitoring computer. The principle is shown below, in figure 3. The SNMP data packet enters network interface chip via RJ145 and network transformer, unpacked by chip via hardware, and then data is transmitted to DSP processor for corresponding processing, and the devices, such as controller, are operated and controlled via communication interface. After DSP processor has sorted out the status information of the unified time devices received from CAN bus, it will transmit it to the monitoring computer in the data format of the SNMP. And, EEPROM is used to save configuration of the network interface.

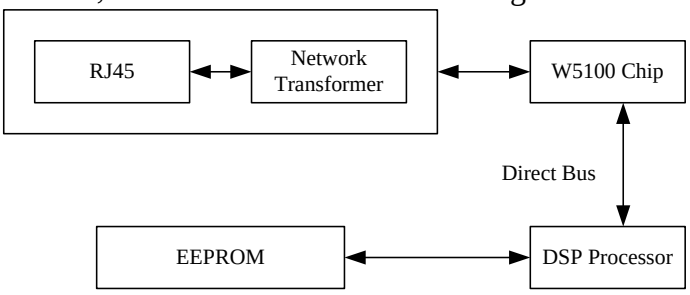

Fig. 3 Schematic Circuit Diagram of Network Interface

The function of the communication interface is to report the status of unified time devices to DSP processor for appropriate processing, and at the same time, the communication interface transmits the operating command from monitoring computer to the bus of the unified time controller device by CAN bus electrical level, and then configure the unified time controller devices. The principle is presented in figure 4.

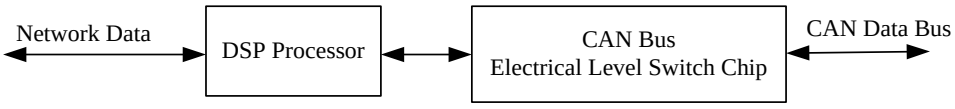

Fig. 4 Schematic Circuit Diagram of Communication Interface

3.2 Analysis of the Causes of the Problems

Analyze the components of the supervisory control platform and the principles of the SNMP monitoring module, combing them with the existing problems, and then analyze the causes of the problems as well as confirming and orientating the problems.

3.2.1 Problem Orientation

When the problems that time on the supervisory control software interface freezes, the unified time controller devices are shown as “offline” and the SNMP monitoring module is “offline” occur, the unified time controller functions well and the generator faceplate works normally, and the temporal information output is normal, too, so that hardware default of the devices could be excluded.

About the problem that the “Remote Control” function of the supervisory control software could not work normally, by analyzing the principles of the SNMP monitoring module and supervisory control software, and inspecting supervisory control software code, it is found that the temporal information and warning information of the devices, such as unified time controller, generator, etc.

are transmitted by the SNMP-Trap thread [6]. When the SNMP-Trap thread hangs, Trap fails in transmission, which would lead to the problems that time on the interface of the supervisory control software freezes, unified time controller devices are shown as “offline” and the SNMP monitoring module is “offline”, etc. And, also, there occurs the phenomenon that the “Remote Control” function of the supervisory control software is null, so that it is impossible to control and configure the united time devices. The screen shot of the SNMP-Trap thread hanging is shown below, in figure 5.

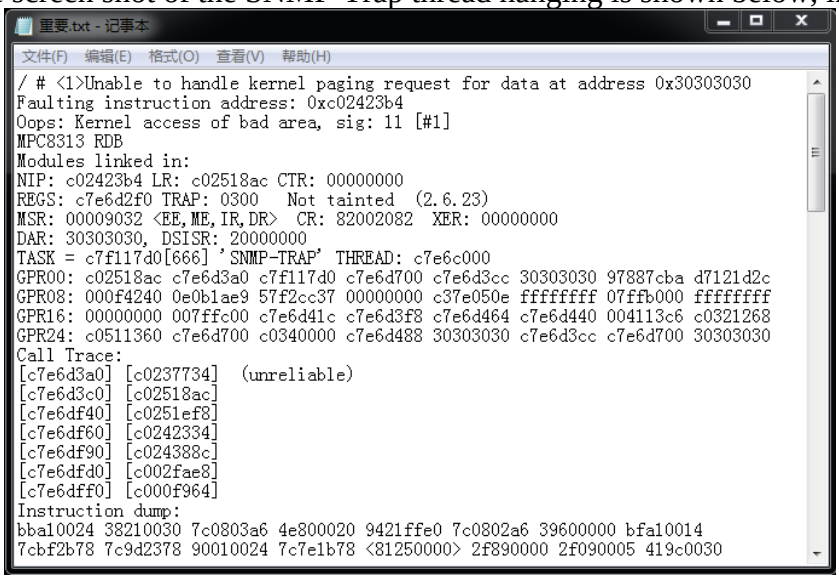

Fig. 5 Screen Shot of Thread Hanging

With analysis above, it could be confirmed that the causes lie in the inappropriate design in the supervisory control software program, where there are some defects.

3.2.2 Mechanism Analysis

The SNMP monitoring module transmits the temporal information of the devices by Trap, including the machine time, Big Dipper time, GPS time, etc[7]. This function is fulfilled by cooperation between two threads. One thread acquires the temporal information of the devices during the rising time, and it is organized to be corresponding information messages, and then the messages that need transmitting are buffered into Trap message queue; the other thread acquires information messages of Trap message queue during the whole time, and once it gets the message, it proceeds packet transmission according to the configuration of Trap Server. The processing flow is shown in figure 6 and 7:

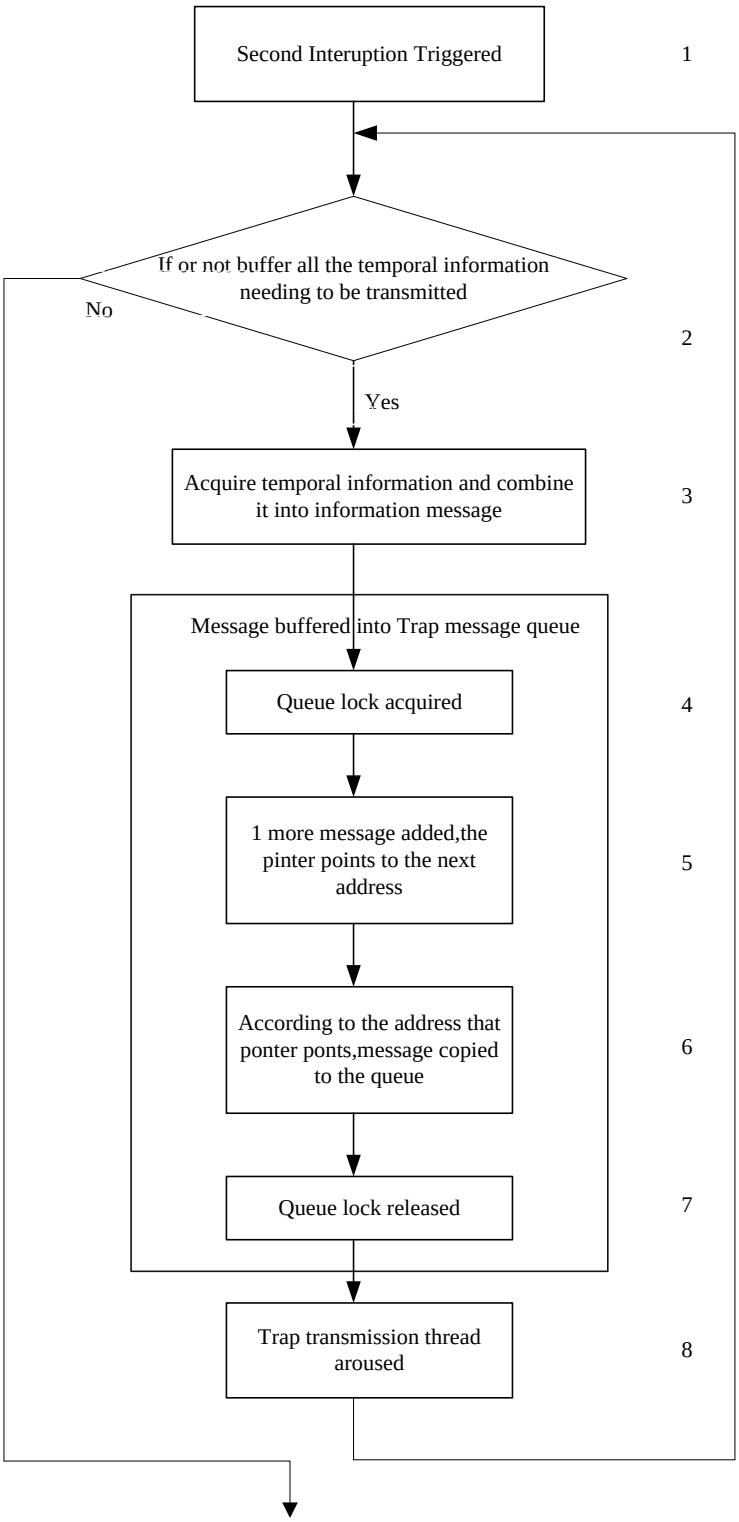

Fig. 6 Processing Flow Chart of Adding Trap Message

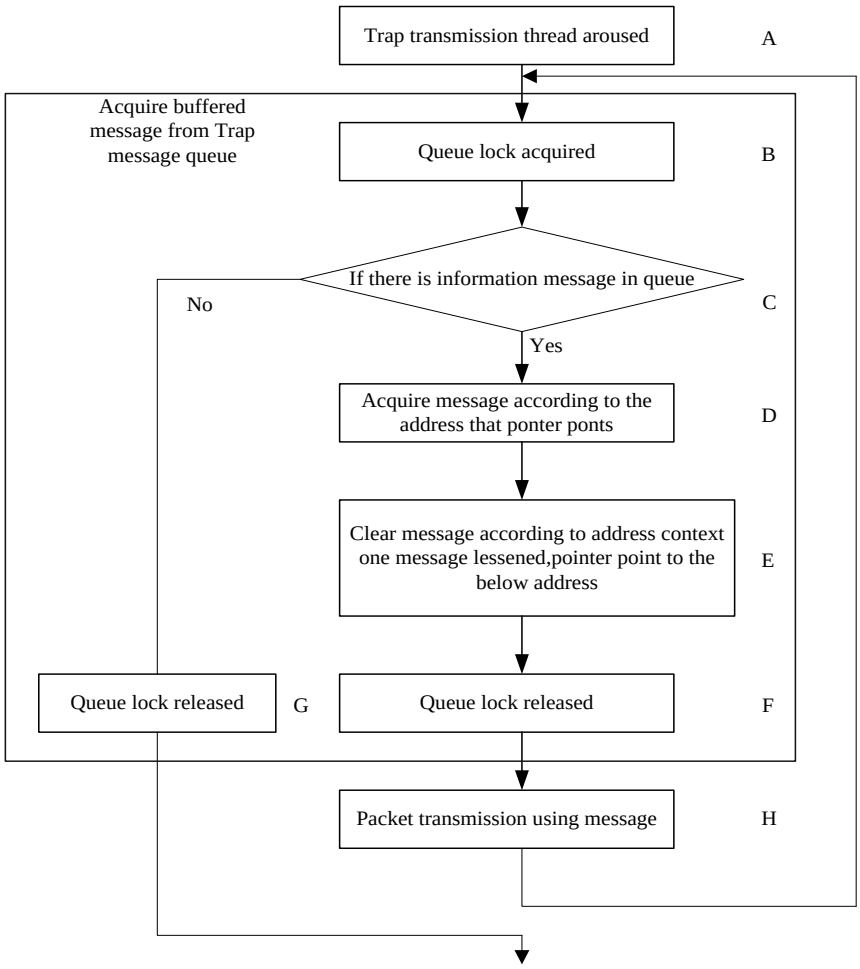

Fig. 7 Processing Flow Chart of Message Transmission

To avoid the interruption between two threads, it is necessary to protect the operation of Trap message queue with protection lock. When the Protection lock is invalid, Trap message queue is damaged, and then the message obtained after the information is transmitted is incorrect, leading to the abnormal access of the pointer. On this case, according to the protection demands from the system, relevant Trap message transmission thread and the SNMP thread will be shut down, which would result in the monitoring module's failure to respond to the requests from monitoring software, and then finally, the above mentioned problem occurs.

4. The Design and Optimization of the Supervisory Control Platform

According to the above mentioned orientation and analysis, about the problem that protection lock of Trap message queue of the supervisory control software is invalid, it is necessary to change the signal variable of the protection lock to realize protection in abnormal situations, and ensure the normal communication between the SNMP monitoring module and supervisory control software, so that the problem could be solved.

4.1 Optimize the Design

During actual testing, it is discovered that the spin lock that should have been used to protect Trap message queue is null. That is to say, Trap message queue is interrupted during operation, and public resources could not be protected effectively; and because in every second, more than one piece of temporal information from devices is transmitted simultaneously by the means of Trap, leading to the results that Trap message queue is damaged, and the message information acquired during transmission is incorrect, leading to the abnormal access of the pointer; after the abnormal access of the pointer, because of the protection demands from the system, Trap message transmission thread and relevant the SNMP thread where the abnormal access of the pointer occurs will be shutdown

abnormally, which will result in the monitoring module's failure to respond to the requests from the supervisory control software, followed by the abnormal status of the supervisory control software. The processing flow is shown in figure 8:

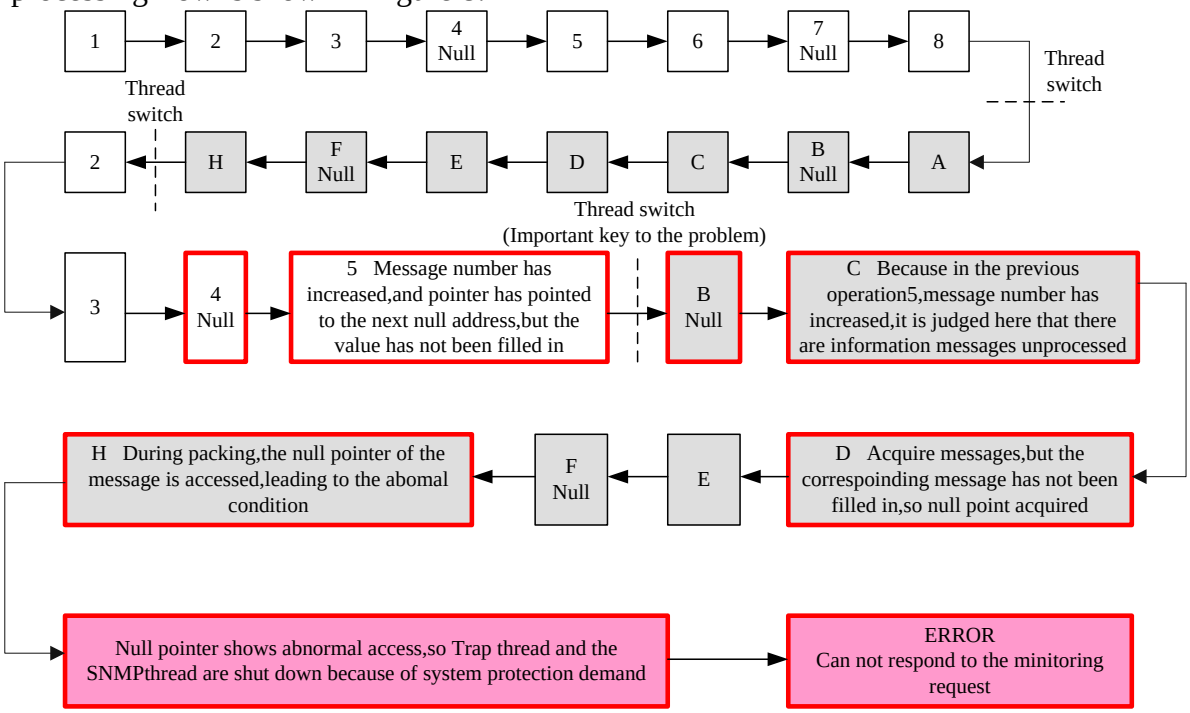

Fig. 8 Processing Procedure under Abnormal Condition

The operation in the red borders are the key to the problems. In operation 4, lock acquiring is null. In operation 5, message number has been increased, and the pointer has changed, but the corresponding value has not been filled in. At that time, thread switch happens (timing sequence is the key to the occurrence of the problems, and because of the randomness in thread switch, the problem could not be reproduced), and then Trap transmission thread executes operation B. Because the lock is null, it is thought that the lock was obtained successfully. In operation C, there are messages that have not be proceeded. In operation D, it tries to obtain messages, but because the corresponding values have not been filled in, it obtains directly null value. Then, in operation H, it operates with the null value during packing, which leads to the access of the null pointer, and then the following abnormal situations.

From the analysis above, it could be concluded that it is necessary to revise the supervisory control software, and change program variable, so that the Protection lock of Trap message queue could function normally.

4.2 The Realization of the Optimized Program

Adopting new semaphore as the protection lock of Trap message queue, to make sure that the protection function of the lock works well. When the protection lock functions normally, and when the thread switch timing sequence same with the above mentioned one happens, the corresponding processing flow is shown in figure 9:

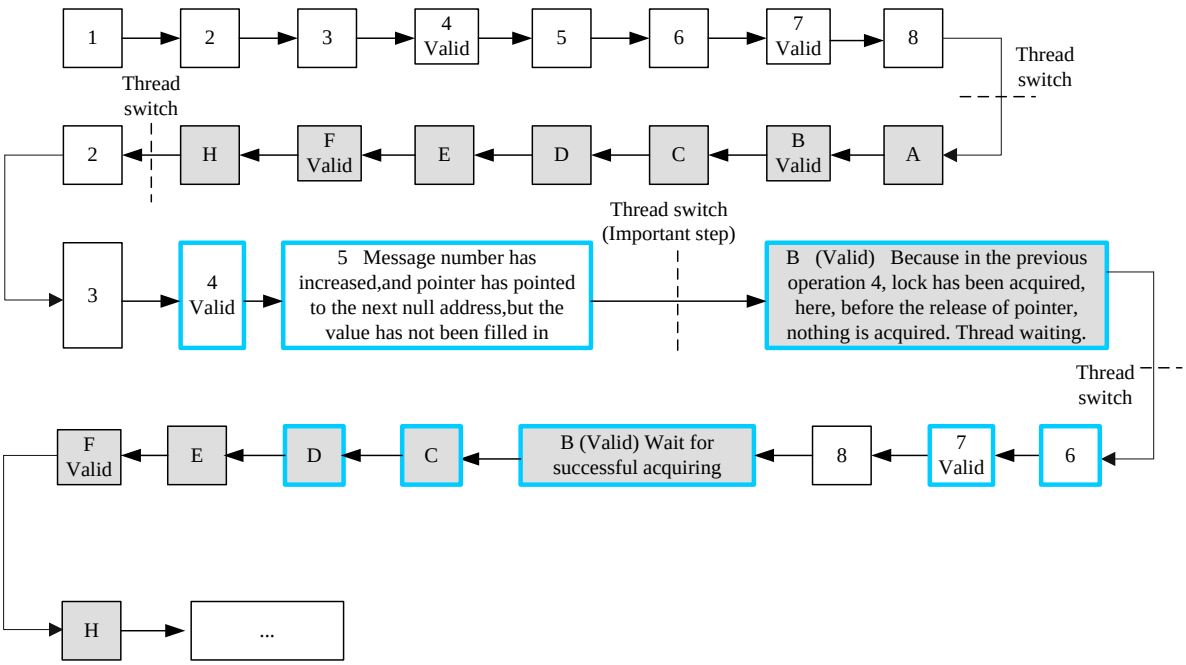

Fig. 9 Processing Procedure under Normal Condition

Under normal conditions, protection lock plays a protective role, which protects Trap message queue (the public resource) during thread switch, to ensure that the queue operation will not be damaged, to prevent Trap thread and the SNMP thread from being shut down abnormally, and to ensure the communication continuity between the SNMP monitoring module and supervisory control software [8].

4.3 Application Verification

Alter the code to the original lock mechanism, and conduct continuous testing for 4 to 5 days. After that, it is found that the SNMP-Trap thread of the monitoring module in the unified time devices is shut down, and the supervisory control software is abnormal, therefore, the analysis above is correct.

Alter the variable of the software program, and adopt new protection lock mechanism. Verified by testing, protection lock could work normally. After it is obtained normally, and before it is released, it could not be captured again, and waiting is the only choice. The function is just the same as it is under normal condition. During the long-term testing on the devices, the function of supervisory control software does not show any abnormality. And, the problem is solved.

5. Conclusion

That the Unified time monitoring software of survey vessels is abnormal and the remote control function is null is because of the null lock used in the code of the monitoring software in the unified time devices. When protection lock is null, Trap thread is shut down, unable to transmit Trap message, leading to the abnormality of the function of unified time monitoring software. Revising it by adopting semaphore as protection lock could avoid the design defects in the monitoring software. The optimized design scheme that is proposed in this thesis could eliminate the hidden faults that contribute to the defects of monitoring software, and it could improve reliability of the real-time supervising and control of the unified time devices status, and perfect the functions of the unified time supervisory control platform, which could provide reliable safeguard for the stable operation of the system. At the meantime, this achievement has application value in other monitoring devices of unified time system, could be promoted and adopted widely.

References

[1] Yanglei. Unified Time System for Shooting Range based on FOGA [D]. The Graduate School of Chinese Academy of Science, 2004

[2] Zeng Huapei. The Study and Design of Remote Control System of Position Control Computer [J]. Telecom World, 2017, (05):24-25

[3] Qianhua. The Study on the Design of the Remote Control System of the Telecommunication Room [J]. Computer Knowledge and Technology, 2009(09):2222-2224

[4] Qiao Jingfeng, Zhaoxi. The SNMP Network Management Technique and its Application in Unified Time System [J]. Electronic Technology and Software Engineering, 2015, (08): 44-45

[5] Yang Chenxia. Program Design for Simple The SNMP Supervisor [J]. Science Mosaic, 2011, (11):57-59

[6] Huang Zhongwei. Realize Application Monitoring with The SNMP Protocol [J]. Computer Programming Skills & Maintenance, 2016, (22):10-12

[7] Chen Aiping, Yangbo. The Design and Realization of Time Synchronized System based on GPS. [J]. Microcomputer Information, 2009, (13):200-201+284

[8] Liukang, Yang Lishen, etc. The Study on Gateway of Wireless Sensor Network based on The SNMP [J]. Computer Application and Software, 2016, (03): 159-162+166