ATLANTIS PRESS
Advances in Computer Science Research (ACSR), volume 76
7th International Conference on Education, Management, Information and Mechanical Engineering (EMIM 2017)

Research of Control System for Embedded CNC Spring Machine

Ziyue Wu [1,a,*], Kai Xiao[1,b], Gen Li [1,c],Jinyao Wang [1,d] and Xu Yang [1,e]

[1] School of Mechatronics Engineering, He'nan University of Science and Technology, He'nan Luoyang, China

[a] wuziyuetutu@126.com, [b] 2659963572@qq.com,[c] 2390064710@qq.com, [d]850797610@qq.com, [e] 664716046@qq.com

* The Corresponding author

Keywords: GUC; Spring machine; CNC; Control system; CPAC

Abstract. It introduces an embedded system, which is applied to the control operation in the production of CNC spring machine. According to the structural characteristics and forming principle of the spring, the production process is designed. The system adopts the solid high GUC controller and the configuration software Oto-studio to realize the modular design of the control system. The HMI human-computer interaction interface is designed and carried out on the CPAC servo experiment platform. The simulation results show that the system is stable and dynamic, and it has high practicability and market value.

Introduction

Spring is the basic components, in the construction machinery, machinery and equipment, energy, aerospace, textile, automotive and other industries widely used in the national economy and social development play an important role, the rapid development of China's manufacturing industry, varieties and the number is also increasing, but the domestic spring industry, industrial structure is worrying, low-grade general product overcapacity, high-grade products in short supply, domestic CNC spring machine production enterprises are few, and most of the CNC system depends on foreign imports or from Taiwan Area. Breaking the current spring industry pattern, researching and developing an open of CNC system independently has become an urgent need to solve the problem [1-3].

At present, computer programmable automation controller CPAC has been widely used in laser engraving machine, flame cutting machine, robot, automated production line and other control systems. This project takes CPAC as the platform of the spring machine numerical control system as the research object, carries on the modular design to the system, develop a good openness and scalability of the spring machine numerical control system.

Basic Parameters and Forming Principle

The spring winding problem is one of the important parts of the numerical control system of the spring machine. It needs to analyze and calculate the main parameters, technical requirements and characteristics of the processing spring, compile the machining program, control the movement of the movement axis, and finally finish the spring manufacturing. Fig.1 shows the main parameters of the cylindrical spring, where the main parameters used in this paper are calculated as follows:

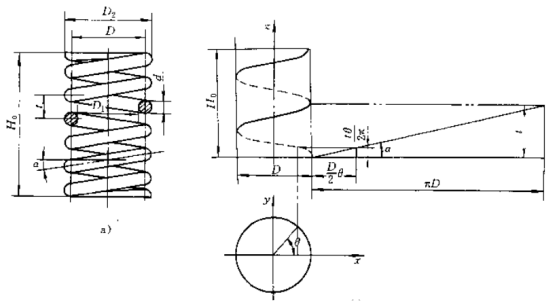

Figure 1. The main parameters of cylindrical spring

$$H_0 = (n + 1.5d) + 2D_1 \tag{1}$$

$$l = \frac{1}{2}\int_0^{2n\pi} D(\theta)d(\theta) \tag{2}$$

$$\Delta l = \sqrt{l + 2t\Delta t + t^2} - l \tag{3}$$

$$C = D/d \approx (D_2 - d)/d \tag{4}$$

Where H_0 is the spring free height, N is the effective number of springs, d is the diameter of the spring wire, D is the diameter of the spring, D1 is the inner diameter of the spring, D2 the diameter of the spring, l the spring is the length of the expansion, θ is the center angle, t is the lead of the spring, C is the spring coiling ratio.

The rotation of the spring influences the spring winding process. Generally, the range of C is 4 to 16, and if the winding ratio of the spring is too large or too small, it is necessary to take appropriate measures in the process of winding.

The spring forming mechanism mainly comprises a straightening mechanism, a cutting mechanism, a feeding mechanism, a reducing mechanism, a pitch changing mechanism and a mandrel. The principle of spring forming is shown in Fig.2.

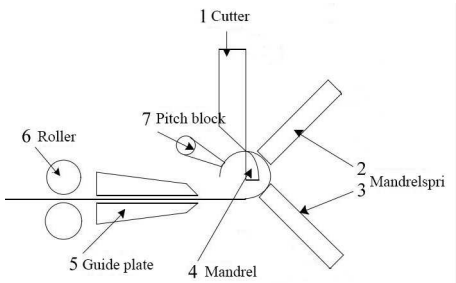

Figure 2. Spring forming principle

In the process, the wire through the alignment mechanism (not shown) straight to the feeding mechanism, through the feeding mechanism of the roller 6 squeeze rotation and guide plate 5 under the action of the feed, in the feeding process , The upper and lower strands 2, 3 can be moved in the axial direction of the respective chute by the limit and guide action of the upper and lower spur levers 2, 3 of the reducer, The position of the rods 2 and 3 can change the diameter of the spring. The pitch block 7 acts to form the screw angle during the winding process and adjust the position of the pitch block 7 to change the pitch of the pitch. That is, the spring machine pitch change mechanism and the reduction mechanism through the combination of movement, change the spring angle and diameter of the spring to complete the different shape of the spring roll, when the spring winding movement is completed, the feeding mechanism to stop moving, cut off the body In the cutter 1 and mandrel 4 under the action of the wire cut off, a spring roll is completed, the cutter 1

back to the original position, the feeder began to feed the movement, start the next spring processing, repeated this movement to achieve Automatic machining of springs.

System Hardware Components

According to the NC spring machine forming principle, processing technology and control needs, the hardware structure of the spring machine determined, as shown in Fig.3. The 4 NC spring machine system hardware mainly includes CPAC (Computerized Programmable Automation Controller), man-machine display panel, sensor, servo motor drive, servo motor, terminal block, etc., the motion controller is selected solid high GUC series of universal integrated motion control GUC-800-TPV-M0X-L2-CPAC, the motion controller through the system CANOPEN bus terminal board GT2-800-ACC2, terminal board and drive and external input and output devices connected through the cable, the Shafts are used SANMOTION R ADVANCED MODEL series servo motor for mopping the ground, the motion controller HMI interface through modbua serial port solid high production company CNC man-machine display panel GTC_EP_01A, in addition to the system is also equipped with a rich remote I/O interface through the Googollink bus is connected to the motion controller for easy expansion of the function. CPAC integrated controller and "industrial computer + motion controller" structure of the motion controller system (PLC, PAMC) compared to more stable, reliable and has a very good price. GUC-800 series motion controller can control 1 to 8 servo axis movement at the same time to complete the complex multi-axis coordinated movement, the core is composed of high-performance DSP signal processor and FPGA to support linear interpolation, circular interpolation function; Support open-loop control; PID + speed feed forward + acceleration feed forward function; in high-speed, high-precision interpolation movement to play a superior motion control performance [4-5].

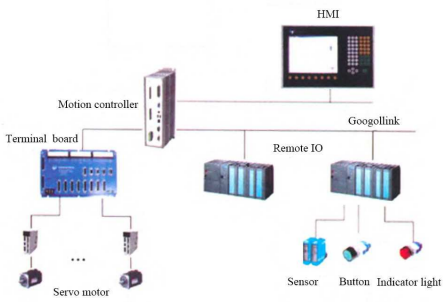

Figure 3. System hardware diagram

The control object of the system is six servo motors, which control the spring feed axis (Y axis), the spring pitch axis (Z axis), the lower top spring (X1 axis), the top spring rod (X2 axis) , Cut off the shaft (A, B axis). (Y axis) as the main axis, the remaining axis for the driven shaft, by setting the effective length of the spring L, lead t, diameter and wire diameter d and other parameters, start the motor rotation, the motor shaft to follow the initiative When the Y axis is finished with a spring effective length L, the X1 axis, the X2 axis, and the Z axis are also finished with the pitch (lead) t and the outer diameter, and cut off the A Axis or B axis to complete the cut action.

The motion mechanism of the NC spring machine is designed as a single servo axis control, which can realize the uniaxial motion and multi-axis linkage of each axis. By using the sensor technology, the closed loop feedback control of the spring machine system can be realized to improve the response speed and precision of the system, Meet the control needs of CNC spring machine.

System Software Design

The software part of the spring machine adopts the Oto-stdio programming software developed by the company, which is based on the Windows CE operating system. The software is burned into the

controller through serial communication or Ethernet communication. The spring machine software system is divided into man-machine interface according to the function module, motion control module, status monitoring module, parameter management module, program management module, as shown in Fig.4 [6-7].

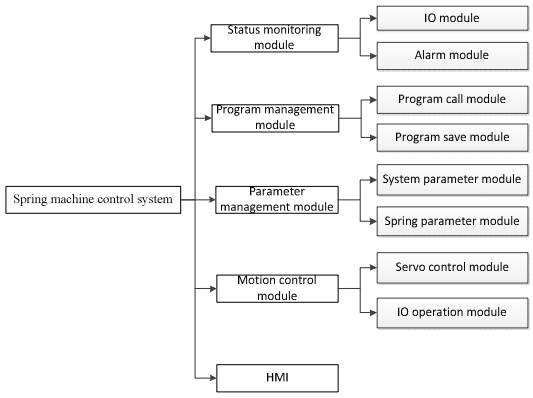

Figure 4. NC spring machine software system structure

The control function module is the core module of the spring machine to realize the coil spring movement, which mainly comprises the servo control module and the I/O control module.

The parameter management module is divided into two parts: system parameter module and spring parameter module. The system parameters include pulse equivalent, motor speed, motion acceleration and motion position. The spring parameter module mainly manages the setting of the basic element of spring.

Program management module mainly used to achieve different spring processing procedures to save and call.

The status monitoring module includes the fault alarm module and the I/O module. The user can monitor the spring machine in real time through the I/O module. When the fault occurs, the alarm module will send out the alarm signal promptly and prompt the user for the cause and location of the user through the alarm interface.

Spring machine man-machine interface includes: the main interface, hand/automatic operation interface, parameter setting interface, status monitoring interface, program management interface, production status interface, I/O signal interface.

Man - machine Interface Design

Man-machine interface is the user interaction with the control system bridge, the user through the man-machine interface will be processing procedures, spring parameters and other instructions sent to the system to control the processing process. Control system through the man-machine interface will be motion status, fault alarm and other information back to the user, to facilitate the process of spring processing to monitor, specifically described below.

When the program is started, the main interface will automatically jump into the main interface after the initialization. The main interface is divided into state display area, axis coordinate display area, running prompt area, simulation demonstration area, key function area and so on. In the function display area is divided into I/O control, reset, control mode three parts, including control mode by the manual control and automatic control of the two modules, the current state of the manual control state, Press the key to select the movement axis to achieve positive jog or negative jog, you can also adjust the hand wheel speed by hand wheel speed control function.

The parameter setting interface is used to view and modify the various parameters of the normal operation of the system. The parameter setting page includes machine parameter setting, spring parameter setting and compensation setting four input pages, the machine parameter Set the position information and speed values of each axis. The spring parameter setting includes the spring type, the rotation direction, the pitch, the number of turns, the outer diameter and so on. The compensation setting includes the feed length compensation and the outer diameter compensation.

As shown in Fig.5.

Figure 5. System main and parameter setting interface

The program interface is used to view the machining status and edit the machining program. The machining status display section contains several parts of the machining program number, the target quantity, the finished product quantity, the machining speed, the probe setting, the probe failure, and the time date display. The program content section contains the display of the machining steps during spring processing, modification and saving of the programming contents [8].

Alarm display interface is mainly used for system status prompts and fault alarm. When the machining program is completed, the system will pop up the alarm interface prompts the number of processing has been completed, as shown in Fig.6.

Figure 6. Program processing and alarm display interface

System Software Implementation

At the beginning of the program, the motion controller and the axes should first be initialized to prevent personal injury or equipment damage caused by misapply.

There are read planning positions, initial motion parameters of each axis, initial system parameters and set the zero signal, limit signal, alarm signal, encoder direction, servo control mode and so on.

The servo control module is the most important part of the spring machine control system and contains most of the control functions during spring production. Such as spring machine reference zero, motor start and stop, automatic movement, manual movement, interpolation movement, multi-axis linkage, movement prospective control. The servo control module implements the function of each part by calling the function block in the ladder diagram (LD) language programming by encapsulating the subroutines of each function into FB function blocks [9].

The I/O control module function includes open-loop analog voltage output function, IO limit and soft limit, IO trigger smooth stop or emergency stop, to provide entry into the bit error flag, high-speed hardware capture Home, Index and probe signals to achieve high Precision encoder position latch and so on. As shown in Fig.7.

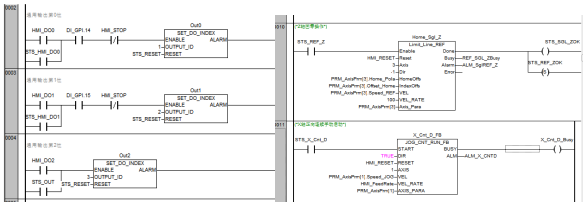

Figure 7. Servo Control Module and I/O control module

Conclusions

Based on CPAC computer programmable automation controller of the NC spring system design, reducing the mechanical structure of the spring machine, increasing the processing range and improve the processing efficiency, while the modular design reduces the development cycle and reduce development costs. Because of the open nature of CPAC computer programmable automation controller, it is convenient to upgrade the system hardware and software. It can expand the function of NC spring machine according to the specific requirements, so as to improve the working ability.

References:

[1] X.M Xu, Z.F Wei, L.M Hu and G.S Wang. Research and development of open CNC system based on PC and motion controller [J]. Manufacturing Automation. 2012,03:107-110.
[2] H.S Song, S.Chen and B.Q Zhang. Development of CNC System in Windows Environment [J]. Machine Tools and Hydraulic, 2012, 04:78-81.
[3] W.W Lin, P.S Zhong, X.D Lv, B.Ge and K.liu. Design of NC System for Embedded CNC Turret [J]. Application of Electronic Technology, 2014, 11: 26-28+35.
[4] Y.Xu, J.C Liu, L.Liu. Development of Six - DOF Open Robot Control System Based on CPAC [J]. Manufacturing Automation. 2013,10:29-31+35
[5] N.N Zhou, L.Wang and L.yin, Design of Intelligent Traffic Signal Lamp Based on CPAC [J]. Machinery and Electronics, 2016, 06:65-67.
[6] Y.Q Zhou. Design of Electric Control System for Three - axis NC Spring Machine [J]. Mechanical and Electrical Engineering Technology, 2014, 09: 114-117.
[7] H.R Cao, Y.C Xie. Development Trend of NC Spring Machine [J]. Modern Vehicle Powered, 1996, 03: 5-8+24.
[8] W.Z Pang, X.C Ku and J.S Li. Research on Numerical Control System of Coil Spring Machine Based on Motion Controller[J]. Manufacturing Technology and Machine Tools, 2011, 06:56-58.
[9] CAN-based Synchronized Motion Control for Induction Motors [J]. International Journal of Automation; Computing, 2009, 01:55-61.
[10] Bill Savela. Motion controller renews old machine [J]. Hydraulics andamp; Pneumatics, 2011, 644.