ATLANTIS PRESS
Advances in Engineering Research (AER), volume 143
6th International Conference on Energy and Environmental Protection (ICEEP 2017)

Research on the Performance of the Resistance of Cavitation for Ship Propeller Based on HVOF

Cheng Yongchao[1, a],Deng Haihua[2, a],Wu Xiangyu[3, a],Xue Peng[4, a]
[1]The Second Ship Design Institute of Wuhan, Wuhan 430063, China
[a]15997433862@126.com

Keywords: ship;cavitation coating;HVOF
Abstract. This paper studied the anti-cavitation performance of the high velocity oxy-fuel(HVOF) Ni60 powder coating by experiments, and compared the anti-cavitation performance of 2 kinds of powder coating—HVOF Ni60 and HVOF NiCr, and compared HVOF Ni60 powder coating with oxyacetylene flame spraying Ni60 powder coating for the anti-cavitation performance. The results have a great guiding significance to ship propeller's cavitation repair.

Introduction

Ship parts' cavitation is very common. Cavitation will appear in every flow pass component of hydraulic machine on different levels in ship parts,such as ship propeller, ship rudder paddle, marine pump, marine main engine fuel circulating pump, etc. And propeller is one of the ship parts which are quite seriously cavitated. Propeller provides power source for the ship by high-speed rotating and is in the water-and-bubble environment all the time. The bubbles attached to propeller is harmful—it will cause the deterioration of propeller's hydrodynamic performance, make propeller to suffer denudation deterioration, cause strong underwater noise and intensify the vibration of the ship. In shipbuilding, we often find that the propeller is cavitated. The cavitation level is different due to the difference of propeller's material and shape. Generally speaking, the copper propeller has small cavitation area but deep cavitation cave, while the stainless steel propeller is opposite to it[2]. The propeller's cavitation should be repaird in time once discovered, otherwise, not only the ship's hydrodynamic performance will decline, more seriously, it will accelerate the propeller's cavitation speed. As once the cavitation cave appears, the area is more likely to have bubbles attached to it and compared to smooth blade surface, the bubble in the cave is harder to leave the blade surface. When the local pressure of the blade-rounded flow decreases to a certain critical value, the bubbles will grow till burst, which will accelerate the denudation of the cavitated blade surface [1].

The research and application of the anti-cavitation material is a significant measure to relieve cavitation and extent the service life of the flow pass component of hydraulic machine. Processing hardened stainless steel, shape memory alloy, processing hardened intermetallic compound, Ti-based alloy, etc are research hotspots on the anti-cavitation material in recent years. The preparation of the anti-cavitation coating integrated well with matrix on the surface of flow pass component, including metal matrix coating and nonmetal matrix coating, is an effective way to reduce cost and improve the anti-cavitation performance. Rapidly solidified materials could have some structures and properties that normal solidified materials don't have, like amorphous, microcrystal, nano-crystalline, etc. These structures have high yield strength, hardness, abrasive resistance and good plasticity, tenacity, which are needed for resisting cavitation. Therefore, it's very necessary to research the anti-cavitation performances of rapidly solidified materials or rapidly solidified coating[5].

Obtain the Ni60 coating by choosing thermal spray process of HVOF, and conduct a series of anti-cavitation experiments on this basis. Explore the anti-cavitation mechanism of the Ni60 coating by comparing the oxyacetylene flame spraying Ni60 powder coating with the HVOF NiCr powder coating for the anti-cavitation performance. The results have a great guiding significance to ship propeller repairing.

Copyright © 2017, the Authors. Published by Atlantis Press.
This is an open access article under the CC BY-NC license (http://creativecommons.org/licenses/by-nc/4.0/).

Test phenomena and result analysis

Test material. The Ni-based self-fluxing alloy powder Ni60 is a kind of high hardness Ni-Cr-B-Si alloy powder. Its self-fluxing, wettability and spray welding performances are excellent and it has low melting point. Spray welding coating has characteristics like high hardness, anticorrosion, wear-resisting, heat-resisting and it is hard to be cut while wet grinding is suitable for it. Melting temperature of the powder: 980~1060°C, hardness of the spray welding coating: HRC58 ~62, density: 8.9g/cm3.The chemical component of the Ni60 powder is shown in table 1.

Table 1 Chemical component of the Ni60 powder (Wt%)

C	Cr	Si	B	Fe	Ni
0.5~1.0	14~19	3.5~5.0	3.0~4.5	< 15.0	Residue

The specimen size is as GB/T8363-86 required, process the specimen shown in figure1. The mass deviation of the specimen should be less than 0.5g, the height of cylinder part should not be less than 8mm, and the length of screw thread should not be less than 7mm. Place 9 specimens in the special jig once, finish spraying at the same spraying parameters. The size and shape of the specimen is shown in the picture. The thickness of the spray coating should be controlled to 0.4~0.5mm, polish the end face as required at last, making surface roughness Ra reach 0.8μm.

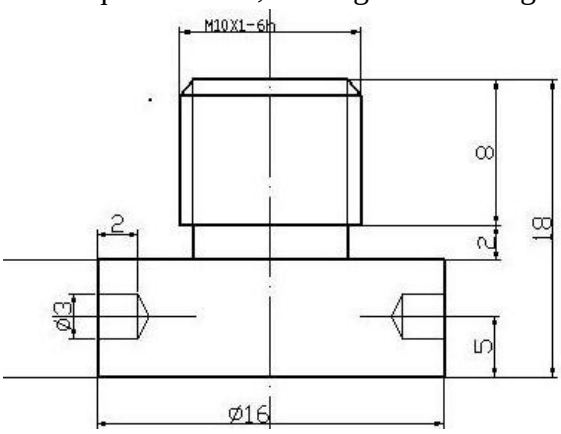

Fig 1 diagram of cavitation specimen **Fig 2 ultrasonic vibration cavitation testing machine**

Test method. Using domestic TⅠ-Ⅱ3200CY type HVOF equipment, and this equipment use aviation kerosene as fuel, oxygen as oxidant gas, nitrogen as powder feeding gas. The technical parameters of spraying are shown in table 2.

Table 2 Main technical parameters of HVOF spraying Ni60

Spray gun type	Fuel flow rate（L/h）	Oxygen flux(L/h)	Powder feeding speed(kg/h)	Spraying distance(mm)
Long type	20	1750	< 15.0	370~380

The adopted cavitation device is refitted by 250W, J93025 type ultrasonic machine which is manufactured by WuXi Ultrasonic Electron Plant. The testing machine is made up of ultrasonic generator, ultrasonic vibration system and the main body of machine tool, as shown in figure 2. The test method is executed by reference to GB/T8363-86, and test parameters are shown in table 3.

Table 3 Test parameters

Temperature/°C	Frequency of vibration/kHz	Magnetizing current/mA	Screen current/mA	Volume of the test solution/mL	Immersion depth/mm
30	18.9	6600	200	1000	3

Test results and analysis

Turn on the cavitation testing machine, take the specimen each hour, let it dry after cleaning, put it on the electronic scale with high accuracy to get the mass, and compare it with the last mass to get the mass loss. The surface of the specimen goes from smooth to rough and the degree of roughness gets more and more obvious during the test, shown in figure 3.

Fig 3 Specimen surface comparison before and after the test(left/before test)

According to the test results, transform the specimen's cavtiation mass loss to volume loss and obtain the cavitation rate shown in the table 4.

Table 4 Volume loss table

Experiment time（h）	Total volume loss（mm3）		
	No.1 specimen	No.2 specimen	Oxy-acetylene spray melting Ni60[3]
1	0.258427	0.089889	1.2132
2	1.044944	0.910112	2.1423
3	1.707865	1.719101	3.7631
4	2.561798	2.067416	5.0356
5	3.471910	2.696629	5.1263
6	4.101124	3.561798	6.0112
7	4.471910	3.977528	6.9137
8	4.707865	4.786517	7.5345
9	5.011236	5.258427	8.3123
10	5.224719	6.202247	9.5019
11	5.415730	6.640449	11.0243
12	5.561798	7.089889	11.9467
13	5.741573	7.719101	13.0324
14	6.033708	8.011236	14.1253
15	6.179778	8.191011	15.0119
16	6.471910	8.314607	15.2321

(oxy-acetylene spray melting Ni60 specimen's data is comes from Ding Zhangxiong, etc<The anti-cavitation research of Ni-based and Co-based alloy flame spraying coating>)

Draw the volume loss curve using the data above, shown in the fig 4.

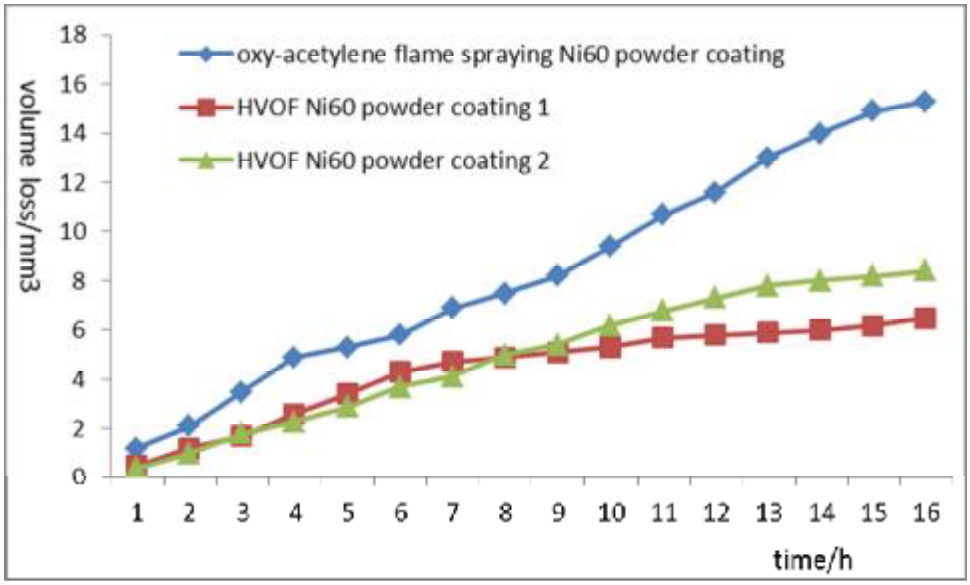

Fig 4 Volume loss curve

Obviously,HVOF Ni60 powder coating's anti-cavitation performance is superior to oxy-acetylene flame spraying Ni60 powder coating. The HVOF Ni60 powder coating's anti-cavitation performance is shown in table 6:

Table 5 Comparison of HVOF spraying Ni60 and NiCr [4]

Material	Mass before test(g)	Mass after test(g)	Cavitation mass loss（mg）	Average cavitation mass loss（mg）
Ni60	1904898	19.4884	1.4	1.10
	19.3467	19.3452	1.5	
	19.0146	19.0142	0.4	
NiCr	19.3262	19.3173	8.9	10.96
	19.7769	19.7694	7.5	
	19.0943	19.0778	16.5	

Figure 4 shows that as the time goes, the cavitation will cause more damage. Compared to oxy-acetylene flame spraying Ni60 powder coating's anti-cavitation performance, the HVOF Ni60 powder coating's slope of the curve is obviously smaller. It shows that the HVOF Ni60 powder coating has better anti-cavitation performance than the oxy-acetylene flame spraying Ni60 powder coating. And in comparison in table 6, the HVOF Ni60 powder has better anti-cavitation performance than the NiCr powder coating.

Conclusions

In this paper, we adopted HVOF technology to make the Ni60 powder coating, conducted the anti-cavitation test of the coating, and studied the coating's anti-cavitation mechanism preliminarily. By researching we draw conclusions as follow:

The Ni60 powder coating made by HVOF technology obtains fine microstructures, compact coating and low porosity rate.

The HVOF Ni60 powder coating has excellent anti-cavitation performance, especially its well combination with copper matrix, so it is more suitable for being as ship propeller's anti-cavitation coating.

The HVOF Ni60 powder coating has better anti-cavitation performance than the oxy-acetylene flame spraying Ni60 powder coating and the HVOF NiCr powder coating.

Comprehensive research shows that: in the operation condition of a practical ship propeller with serious cavitation, the HVOF Ni60 powder coating has excellent characters of service with its favorable anti-cavitation performance.

References

[1]Li Changjiu. High velocity oxy-fuel and coating performance research[J]. Surface Engineering Magazine, 1996: 29~31.

[2]Ding Zhangxiong, Wang Qun, Chen Zhenhua, etc. The anti-cavitation research of Ni-based and Co-based alloy flame spraying coating[J]. Journal of Hunan University(Natural Sciences), 2008 (1), 35(1): 66~70.

[3]Zhao Hui, Zhang Yunqian, Ding Zhangxiong. HVOF spraying nano-structure WC212Co coating's anti-cavitation performance research[J], Journal of Wuhan University of Technology(Transportation Science and Engineering), 2007 (6) , 31(3): 468~471.

[4]Duan Xiangyang ,Wang Yongsheng, Xie Peilin, Su Yongsheng. High velocity oxy-fuel(HVOF) coating's anti-cavitation performance research[J]. Pump Technology, 2008(6) : 38~40.

[5]R．J．K．Wood,Y．Puget．The performance of marine coatings and pipe materials under fluid-borne sand erosion [J]．Wear,1998（4）:46～59．

[6]Wu Guanglin, Yan Jin. Marine propeller's applying and development tendency[J]. Shipbuilding Technology, 2008 (9): 49~51.