ATLANTIS PRESS

Advances in Engineering Research, volume 120

International Forum on Energy, Environment Science and Materials (IFEESM 2017)

Design of High Precision Digital AC Constant Current Source

LIU Hongzheng[1, a], YUAN Haiyan[1, a], SHI Zhen[2, b], SUI Shougang[2, b], WANG Kuan[2, b],

[1]State Grid Shandong Electric Power Research Institute, China

[2]Robotics and Intelligent Systems Research Institute of Shandong Jianzhu University, China

[a]260347573@qq.com, [b]szxx307@126.com

Keywords: AC constant current source; AD9850; digital potentiometer; PID controller

Abstract. This paper introduces the design idea and realization method of AC constant current source, which is composed of direct digital synthesizer and digital potentiometer. The design has advantages of simple structure, strong practicability, high stability and high precision, and equipped with a standard expansion interface, practical application on the instruments, testing equipment which is need for high precision constant current source.

Introduction

Constant current source is a power supply that can provide constant current to the load, and stable constant current source is needed in many high-precision measurement and control systems. For example, when the current transformer is calibrated, the AC constant current source with different frequency and different current value is usually needed. Constant current source is also widely used in measurement circuits, such as measurement and classification of resistance value of resistors and measurement of cable resistance, and the more stable the current, the more accurate the measurement. With the development of modern technology, the demand for constant sources is increasing, such as robotics, industrial automation, power communications, satellite communications, intelligent instruments and other digital control are in urgent need of application of constant current source, so the research and development of more practical constant current source has a very important significance.

Most of the traditional AC constant current source circuit using SPWM (Sinusoidal PWM, sinusoidal pulse width modulation) waveform control inverter circuit, first convert the alternating current on the primary side of the transformer into direct current, then the direct current is controlled by the SPWM waveform control inverter circuit into the required alternating current. Frequency and current size of this type of AC constant current source are difficult to control, not only expensive, bulky, complex circuit design, but also produce a large amount of harmonic feedback to the grid, easy to interfere with the normal work of electronic products, prone to failure.

Through the improvement and innovation of the AC constant current source technology, this paper designs an AC constant current source with high current precision, controllable amplitude frequency, low cost and not easy to fail.

Circuit design and principle

The AC constant current source system uses the MSP430F149 single-chip microcomputer as the control unit, the sine wave signal by controlling the AD9850 signal generator to generate a certain frequency, and by controlling the digital potentiometer to adjust the amplitude of the signal, the amplitude-modulated signal is sent to the voltage controlled constant current source circuit to generate a corresponding constant current. Considering the impact of the change of environmental parameters and electromagnetic interference on the system, in order to ensure that the output current value of the system is set value, the current acquisition circuit is added at the output end, Convert the current signal into a voltage signal, through single chip microcomputer A/D sampling function to get the voltage, then the system control quantity is calculated by PID algorithm , and by adjusting the digital

potentiometer to complete control of the current output value. The AC constant current source principle diagram is shown in Figure 1, the system is mainly composed of a power part, PID control part of single chip microcomputer, signal generator, signal amplitude adjustment part, voltage controlled constant current source, a current collecting part.

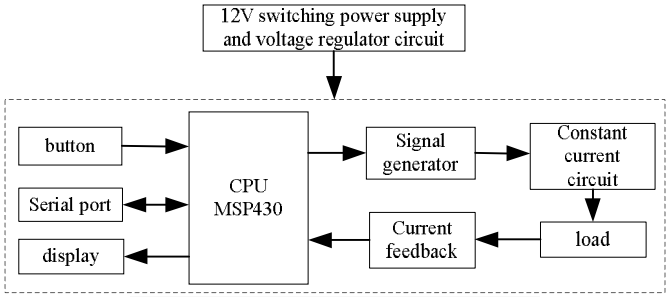

Figure 1 System principle diagram

Its workflow is ：the operator presets the frequency and the current value of the required current by pressing the button, the sinusoidal signal with high precision and adjustable frequency can be generated by single chip microcomputer control signal generator, the signal is adjusted by amplitude adjustment part to adjust the voltage of the sinusoidal signal, then provide the signal to voltage constant current source part to produce a constant current output. Through the collection of current and the single chip microcontroller's AD function to convert it into a voltage value, the PID operation of the collected voltage is obtained to control the value of the digital potential, so that the actual current value is stable at the set value.

1.1 Generation of sinusoidal signal

The generation of sinusoidal signal is based on the DDS chip AD9850 signal generation module, the signal frequency generated by AD9850 can be adjusted, but the amplitude is not adjustable, and the driving ability and anti-interference ability of the output signal are relatively small. In order to solve these problems, the voltage of the peak value of the output signal is up to 9V by the first-level voltage following circuit and the primary amplifying circuit, thus improving the driving power of the signal, the circuit shown in Figure 2.

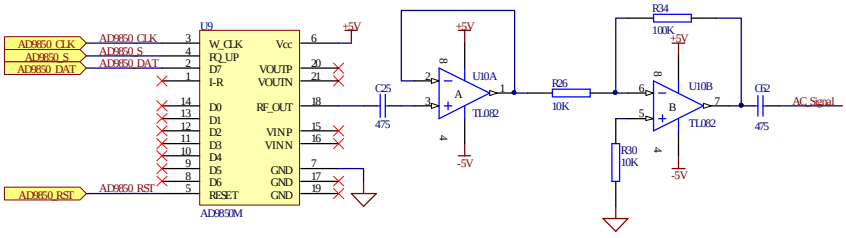

Figure 2 Sinusoidal signal generation circuit

1.2 Voltage control constant current source section

According to the analysis of the function of the constant current source system, the voltage controlled constant current source part is of great significance to the current output.

The constant current source circuit is the circuit of the load co-ground mode consisting of high power transport circuit and feedback circuit, and its circuit diagram is shown in figure 3.

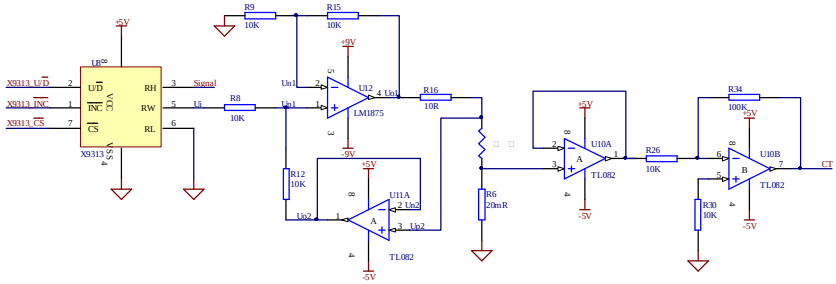

Figure 3 Voltage controlled constant current source circuit

The feedback circuit in the figure is a voltage follower, which ensures that the output current flows almost completely to the load, so that its constant current is better.

The working principle of the circuit is as follows：

In the circuit $R_9 = R_{15} = R_8 = R_{12}$, according to the circuit diagram can be obtained

$$u_{p1} = \frac{(u_i - u_{o2})R_{12}}{R_8 + R_{12}} + u_{o2} = 0.5 * u_i + 0.5 * u_{o2} \quad (1.1)$$

And because $u_{o2} = u_{p2}$, then :

$$u_{p1} = 0.5 * u_i + 0.5 * u_{p2} \quad (1.2)$$

The voltage relation of the same phase ratio amplifier composed by LM1875 is:

$$u_{o1} = (1 + \frac{R_{15}}{R_9})u_{p1} = 2u_{p1} \quad (1.3)$$

Bring it to (3.8) ,then come to a conclusion: $u_{o1} = u_i + u_{p2}$

In the end, calculate the current by the principle of virtual short: $i_o = \frac{u_{o1} - u_{p2}}{R_{16}} = \frac{u_i}{R_{16}}$ (1.4)

According to the equation (1.4), when the value of the current resistance is certain, the amplitude of the output current depends only on the voltage amplitude of the input signal ui, and has nothing to do with the load (within a certain range).

In this design, the digital potentiometer is used to control the amplitude of input signal ui. The digital potentiometer chip used in this work is the X9313.X9313 is a solid-state non-volatile digital control trimmer potentiometer, which is mainly composed of resistor array, conversion gate, 32 select 1 decoder, 5 bit add and subtract counter, 5 bit nonvolatile memory, access control circuit and so on. The resistor array of X9313 contains 31 resistors, and two ends of each resistor can be connected with the tap point of the digital potentiometer through the control of the switching gate; the 5 bit add and subtract counter is used to record the number of pulses at the input; the access control circuit is used to control the access of the count in the five non-volatile memory;32 select 1 decoder to decode the value of the counter, then control a MOS pipe in the conversion gate, so as to control the position of the tap point.

The current output precision of this scheme is relatively high, and the output current range mainly depends on the current output capability of the amplifier itself. Considering the influence of OP AMP on the output current is relatively large, and considering the technical indexes such as zero drift, temperature drift, current output capacity and voltage noise, the high power operational amplifier used in this work is LM1875.The chip has the advantages of high output current (up to 4A), low noise and stable output. The constant current source signal with high precision and stability can be generated by this module.

In order to weaken the influence of the temperature drift of resistor on the system accuracy, the resistance of the part is a precision resistance with a temperature coefficient of 5ppm / ° C.

1.3 Current acquisition section

The current acquisition scheme is a series of sampling resistance in the load loop to realize the sampling of the current. In order to increase the load capacity of the constant current source and reduce the heat loss of the system, the resistance value of the sampling resistance cannot be too large, therefore, 20mR copper wire is selected as sampling resistor. The voltage signal is relatively small, so it needs to be amplified. In order to reduce the impact of the sampling circuit on the constant current source, first, the signal pass through a voltage follower, and then pass through the reverse scale amplifier circuit to increase the amplitude of the signal.

As the signal is still AC signal, it is difficult to measure the size of its effective value if directly input to the microcontroller A / D, so it is necessary to convert the AC signal to the DC signal. The AC signal absolute value circuit in this design is shown in figure 4,the circuit firstly uses the absolute value circuit to rectify the AC voltage signal in full wave, and then converts the pulsating signal into a smooth

DC signal through the filter capacitor, so as to meet the requirements of the A/D acquisition of the microcontroller.

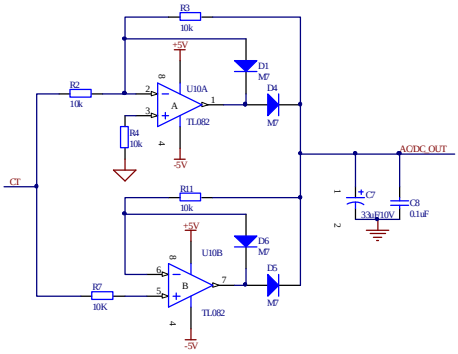

Figure 4 AC signal absolute value circuit

1.4 PID control section

The 1.2 section shows that the system adjusts the output of the constant current source by controlling the resistance of the digital potentiometer, in the current acquisition part of the 1.3 section, the system realizes the digital collection of the output current, this section introduces the use of PID algorithm to analyze the current signal, and get the control quantity of the digital potentiometer ,then through the microcontroller to set the digital potentiometer to complete the adjustment of the output current.

PID algorithm is a kind of control algorithm widely used in automatic control field, and it's closed-loop control algorithm. Therefore, to achieve the PID algorithm, we must have closed-loop control on the hardware, that is, feedback. The feedback in the design is the current value collected by the acquisition circuit. The structure is shown in the following picture.

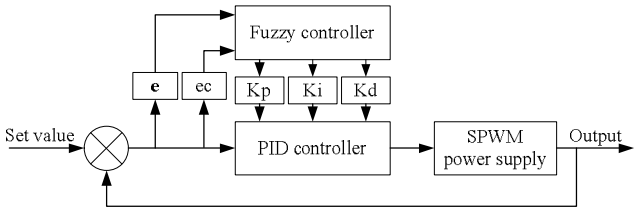

Figure 5 Control schematic diagram

The mathematical formula of PID is as follows:

$$u(t) = K_p * \left[e(t) + \frac{1}{T_i}\int_0^t e(t) + T_d \frac{de(t)}{dt} \right]$$

Among them, e (t) is the system deviation, Kp is the proportionality coefficient, Ti is the integral time constant, Td is the differential time constant, the ratio (P), the integral (I), the differential (D) control algorithm each has the function:

Proportion, which reflects the basic deviation e(t)(current) of system, control the regulating speed of system by changing the size of proportion coefficient. But the overlarge proportion makes the stability of the system decline, and even cause instability of the system, and too small proportion coefficient will lengthen the regulation time of the system. Integral, which reflects the cumulative deviation of system, makes the system eliminate steady-state error and improve the degree of non-error. Because of the error, the integral adjustment is carried out until there is no error. Differential, which reflects the change rate of the system deviation signal, it can foresee the change tendency of deviation and lead the advanced control effect. Before the deviation has been formed, it has been eliminated by differential regulation, so the dynamic performance of the system can be improved. But the differential has a magnifying effect on the noise interference, therefore, strengthen differential is disadvantageous to system anti-interference. Integral and differential cannot work alone, and must be coordinated with proportional control.

Due to the need to run on the microcontroller , continuous PID is required to be discredited , the concrete processing methods are as follows:

Assuming that the sampling time is T, the deviation at the k * T time is e (k), then the following expression form is formed

$$u(k) = K_p(e(k) + \frac{T}{T_i}\sum e(k) + \frac{T}{T_d}(e(k) + e(k-1)))$$

The following formula is obtained

$$u(k) = K_p(e(k) + K_i\sum e(k) + K_d(e(k) + e(k-1)))$$

The above is the position expression of PID, and the incremental expression of PID can be obtained from the above formula

$$u(k-1) = K_p(e(k-1) + K_i\sum e(k-1) + K_d(e(k-1) + e(k-2)))$$

$$\Delta u(k) = u(k) - u(k) = K_p(e(k) - e(k-1)) + K_i e(k) + K_d(e(k) - 2e(k-1) + e(k-2))$$

$$u(k) = \Delta u(k) + u(k-1)$$

Among them e (k) is the difference between the collected current value and the set current value, the value of U (k) is obtained by incremental calculation of PID, so as to control the output voltage of digital potentiometer, when the output current value of the system is changed, in a very short time the system output current value can tend to set value, to achieve the effect of constant current source.

When the system has just started running, the resistance value R of the digital potentiometer (X9313) can be obtained by calculating the initial constant current value set by the system. When the collected current is 0, the control value calculated at this time is $u_{\max}(k)$, and the value of the digital potential is set to R. When the current value is collected again and the control value $u_{rt}(k)$ is calculated, assume that the value of $u_{rt}(k)$ at this time is 0,that is, to achieve the standard constant current value, then the value of R will remain constant. If $u_{\max}(k) > u_{rt}(k) > 0$,so $R = R + \left(R * \frac{u_{rt}(k)}{u_{\max}(k)} \right)$($u_{rt}(k)$ can be positive or negative), and by calibrating the value of the digital potentiometer R, the value of the u_i in the equation(1.4) is adjusted so as to calibrate the current value of the output.

Function extension

In order to make the system have serial port control function and facilitate the connection with other automation equipment, the serial port function of microcontroller is fully utilized in the design, and the MAX3232 level conversion chip is added to realize remote control and multi-station parallel control or sequence control functions.

Conclusion

This paper mainly summarizes the basic concepts of constant current source, uses DDS technology and digital potentiometer to design a new type of AC constant current source, and through the MSP430F149 single chip microcomputer to control the system. The overall structure of the system is simple, practical, with the advantages of high stability and high precision, can be applied to instruments, instruments and other devices which need high precision constant current source.

References

[1]Sun Chuanyou, Sun Xiaobin, Li Shengyu, et al. Measurement and control circuits and devices[M].Beijing: Beijing University of Aeronautics and Astronautics Press,2002.

[2]Liu Wei, Hu Renjie, Wang Zheng. Research on signal generator based on AD9850 chip[J].Electrical & Electronics,2009(11):19-21.

[3]Wang Tianyong, Zhang Zhihai. Discussion on PID in automatic control.[J]Soda ash industry,2010.01：44-47

[4]Hu Shousong. Principle of Automatic Control[M].Beijing: Science Press,2008：55-56