Design of Ultrasonic Range Finder Based on Single Chip Computer

Caiyun Gui
Yulin University Yulin 719000

Keywords: DS18B20; HC-SRO4; Temperature compensation; Voice broadcast

Abstract. In the development of distance- measuring technology, the measurement level has a new standard for distance-measuring technology, especially in some special occasions such as the environment with low temperature and electromagnetic interference. For the special measuring environment, in terms of the distance-measuring, a non-contact method based on ultrasonic ranging is designed to measure the distance in the complex environment.

The 51 single-chip machine is taken as the main controller, and in the distance-measuring process, the 51 single-chip machine driven ultrasonic transmitter and receiver HC-SR04 sensor can accurately measure the distance. Meanwhile, the temperature is used to measure the circuit and make compensation for the suitable temperature of the actual sound speed or reduce the random error. The LCD12864 LCD interface is used to display the data to display when the measured distance and the real-time temperature are less than 50cm, the voice broadcast prompts, and finally the accurate measurement of the distance within the limited range is completed.

Overall Scheme of the System

AT89C51 is used in this system as the control processor and the HC-SR04 sensor to measure the distance. At the same time, a temperature measuring device is designed, and the measurement error compensation is made by the current temperature influence on the sound speed. The output of the sensor module used in this design does not require a special A/D conversion, and the measured distance is displayed on the LCD12864 display screen by the output of 51 single chip machine. The alarm threshold is set up to achieve the alarm requirements. The acousto-optic and voice alarm is immediately. At this time, the voice broadcast announcement of the danger signal less than the safe distance is made by using the ISD1820 voice chip, and the system block diagram is shown in Figure 1.

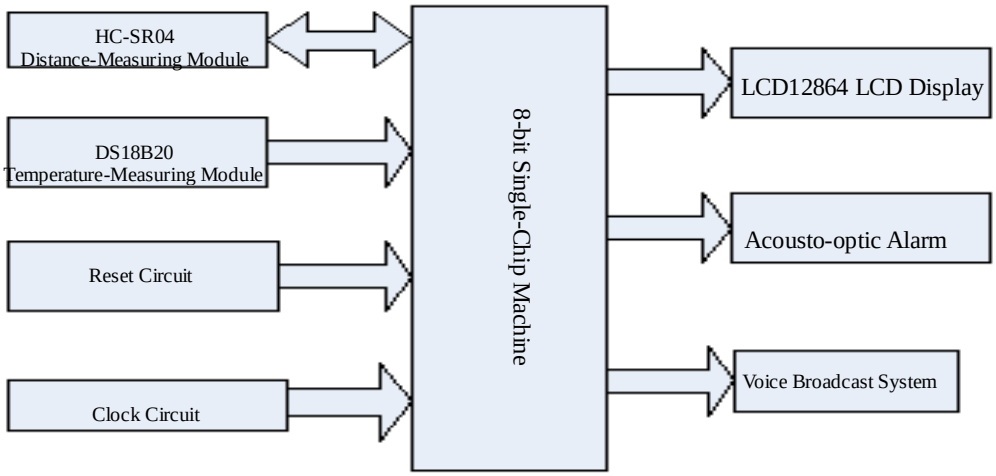

Figure 1. Overall Design System

Design of Temperature Compensation Circuit

DS18B20 is a single bus temperature sensor. The temperature sensor only needs a port pin to send and receive signals. It uses a unique single bus interface connection mode. The connection between the 51 single chip machine and the DS18B20 temperature sensor needs only one data line to be connected to the fixed I/O port of the single chip machine. The pin I/O port of the temperature

sensor chip is connected to the P1.3 pin of the microcontroller, where the VCC pin is connected to the power supply of +5V, the GND is used for grounding, and the resistance R0 plays the role of current limiting. To make the temperature sensor normal to measure the temperature, we only need to read and write the P1.3 pin of the I/O port of the microcontroller, and the sensor will provide the power by the SCM alone. The specific circuit is shown in Figure 2.

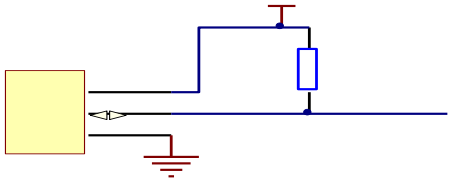

Figure 2. DS18B20 Interface Circuit

Design of HC-SR04 Ultrasonic Circuit

The ultrasonic distance measuring sensor is a non-contact distance measurement. The range of measuring distance is 2cm ~ 400cm, and the precision can reach 3mm. The internal structure of HC-SR04 ultrasonic mainly consists of three parts: waveform generator, signal receiver and control circuit. The control circuit mainly includes amplification, filtering and shaping. The HC-SR04 sensor has 4 external I/O ports, and the pin names are VCC, GND, Trig, Echo. When the receiving end of the echo (Echo) receives the transmitted signal, the change of the pin becomes a high level, representing the success of a range. The specific hardware connection between the HC-SR04 ultrasonic module and the 51 single chip machine is shown in Figure 3.

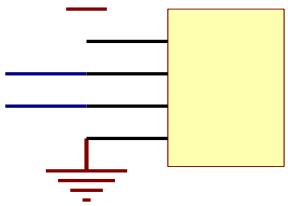

Figure 3. HC-SR04 Interface Circuit Diagram

Design of the Voice Broadcast System

As a voice play, ISD1820 can carry out the voice and speech recognition of the 20S. When the play is triggered, the speech can be clearly restored, and the distortion is very small. In circuit design, ISD1820 voice chip directly adopts analog storage technology, which can be interrupted playback or continuous playback. It is often applied to some functions of MCU development, and more importantly, the operation is simple and easy to implement with flexible interface. The ISD voice broadcast function is realized by two triggering modes: edge triggering and high and low level trigger. In this design, the FT pin of ISD1820 chip is connected with the microcontroller P3.2 port, and it is triggered by high and low level. In the design of the ISD1820 circuit, key1 connects to PLAYE. When the button is pressed, it is shown as a point movement, and the key2 is connected to the PLAYL. When the key press is pressed, it is played continuously, and Key3 is connected to the REC. When the button is pressed to start recording, the key is designed to facilitate the debugging of the circuit. After the system is successfully debugged, there is no need to trigger the key. When the real-time distance of the measurement is less than the set threshold, it will enter the trigger program, and trigger the voice broadcast. The specific connection circuit is as shown in Figure 4.

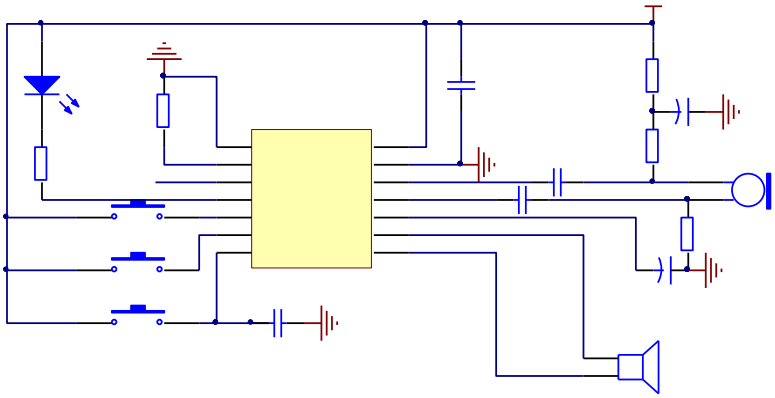

Figure 4. ISD1820 and Single-Chip Machine Interface Circuit

Design of System Alarm Circuit

The alarm circuit has been selected as the JN-3015 type buzzer in the design of the alarm circuit. Therefore, as long as the piezoelectric ceramic buzzer is driven by the triode and connected to the single chip machine, the designed circuit can achieve the function realization. A collector of the transistor is connected to the P2.0 pin by 10K ohm resistor, triggering the alarm device. In this design, the sound and light alarm function is realized when the measurement distance is less than 50cm. The circuit is shown in Figure 5.

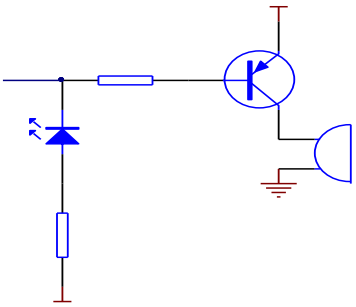

Figure 5. Alarm Circuit

Design of the Display Circuit

In this design, the LCD12864 is selected as the display component. Because it contains a large number of Chinese font automatically, when programming, Chinese characters or graphics are not needed to take modules and Chinese characters can be displayed input and displayed, avoiding the trouble of conversion between large numbers of characters and saving a lot of program segments. In this design, the LCD12864 LCD is needed to display the current dynamic distance and the current dynamic temperature. The driving process consists of: pin definition, definition read and writing data function, read and write command function, liquid crystal initialization and display of the location function, etc. And the displayed data are used in the main program to finally display the data. The connection circuit is shown in Figure 6.

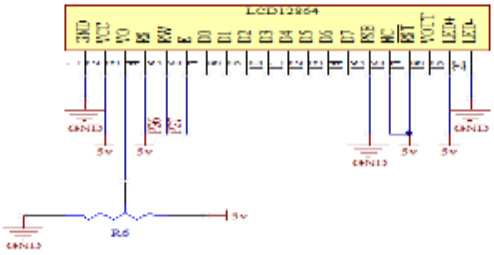

Figure 6. Display Circuit

Design of Program

The main program is the program that controls the single chip computer system's operation according to the predetermined operation mode, and it is responsible for organizing each sub program module. The work process is as follows: the single chip machine enters the monitoring state after the system is on the power, and the initialization of each port is completed at the same time. Without external control information input, the system automatically collects the voltage value of the sensor, and converts the analog signal to the digital signal through the A/D converter. Meanwhile, the threshold is compared with to complete the alarm and display function. The program is designed according to the modularization of the main program subroutine. The subroutine includes ultrasonic subroutine, DS18B20 subroutine, voice broadcast subroutine, and display subroutine.

Conclusion

In this design system, the AT89C51 chip produced by STC is used as the center of the entire circuit design. The errors in error measurements are removed in the ultrasonic distance-measuring circuit. By measuring the real-time measurement distance, the measurement signal is transmitted to the main control chip timely, and the data are processed. Then, the data are displayed on the monitor and broadcasted by voice through LCD12864. The structure of the system is simple and the function is perfect. It can be used to measure the distance accurately.

References

[1] An Xiao. Application of Non - contact Distance Measurement Technology in Industrial Field [D]. Xi'an: Chang'an University, 2012:7-63.

[2] Guo Peng, Han Yuguang, Wang Lei, et al. Design of Intelligent Ultrasonic Testing System [J].Science & Technology Vision, 2015,20(5):20, 113.

[3] Wang Guojun. Research on Ultrasonic Distance Measuring Sensor [D]. Harbin: Heilongjiang University, 2014:7-64.

[4] Chen Song. Research on Temperature and Pressure Testing System of Solid Propellant Kneader [D]. Xi'an: Xi'an University of Technology, 2013:9-71.

[5] Liu Xuelin, Xu Junfeng. Design of Remote Intelligent Burglar Alarm System [J]. Computer CD Software and Use, 2014, (8):29-30.

[6] Li Mingyue, Zhangmin, Shi Yangyang, etc. Hardware Design of GIS Switch Hydraulic Monitoring System [J]. World of Electronics, 2013, (11):110-112.

[7] Lin Fang, Liu Yang, Zhang Yu, etc. Design of Wireless Data Acquisition System of Pumping Unit based on ZigBee Technology [J]. Journal of Daqing Normal University, 2013, 33(6):41-43.

[8] Wang Gang. Design and Research of No - load Current Harmonic Measuring Instrument Based on Single-Chip Machine [D]. Beijing: North China Electric Power University, 2012:8-69.