ATLANTIS PRESS
Advances in Engineering Research, volume 163
7th International Conference on Energy, Environment and Sustainable Development (ICEESD 2018)

Thoughts of drainage design for Chinese highway in water environment sensitive sections

Li Gang[1,2,a], Wang Yue [1,b] , Wang Pan [1,c]

[1] chinese first institute limited corporation of highway survey & design , china

[2] xi`an university of science and technology, china

[A] ligang@163.com, [b]406131607@qq.com, [c] wangp7722@sohu.com

Keywords: china; highway; water environment sensitive sections; drainage design; thoughts.

Abstract: the specifications for drainage design of highways (jtj/t d33-2012), issued by the ministry of transport of the people's republic of china, has been implemented for completed three years. Compared with the last edition, 1997's, the 2012 edition is featured for the specifications of drainage design in water environment sensitive sections. The author, based on his experience of complication for the code, introduces deeply the background, essential contents and key points for drainage design in water environment sensitive sections, and then forecasts the changing direction in the subjected area in next edition of code.

Background of the revised specifications with highway drainage design in water environment sensitive sections

The environment pollution caused by pavement runoff is taken as one of the factors for evaluation of ground water pollution in the specifications for environmental impact assessment of highways (jtgb03-2006) issued by the ministry of transport of the people's republic of china (hereafter as the mot of china). Researches show that alongside the highways in china within a range of 60m wide, contents of elements of pb, co, cr contained in soil reach a slight-medium level of pollution; within a range of 20m wide alongside the highways, the pollution of elements cu, ni and mn reaches level i. Corps planted in polluted soil, water and air along highways are in reduction of output and decay of quality, some are even zero output as the exceeding of the limits for poisonous substances.

Nowadays, environmental protection has been paid more and more attention. The supplement of specifications for water environment sensitive highway sections is a general trend.

The series research on road drainage and water treatment in france can go back to the end of world war ii. With 60 years of development, a set of reasonable and road drainage water treatment standards system has been established with the efforts of insititutions such as the ministry of economy and finance and the state budget (ministère de l'économie finances et budget), the ministry of transport - housing - equipments of tourism and marine (ministère des transports de i'equipement du tourisme et de la mer), the highway technology institute (setra), central laboratory of roads and bridges (lcpc) and etc. The system has been widely accepted and used not only in eu countries but also in countries of africa and asia.

Articles regarding to drainage design on water environment sensitive sections in the 2012 edition are mainly referred to the french general technical provisions of public works industry (cctg), volume 70 - drainage network and ancillary works, technical guide for road drainage 2006 and technical guide for road water treatment 2006 and so on. In addition, in the process of revision of the specification, actual cases in china and china's environmental quality standards for surface water (gb3838-2002) and sea water quality standards (gb 3097-1997)" have been taking as references.

Explanations for highway water environment sensitive sections

The impacts of highway emissions on water environment and measures at home and abroad

Major pollutants of road (bridge) surface runoff are suspended solids (ss), chemical oxygen demand (cod), biological oxygen demand (bod), total nitrogen (tn), total phosphorus (tp), heavy metals, polycyclic aromatic hydrocarbons pahs , inorganic salts and oils.

The concentration of pollutants in pavement runoff is greatly influenced by the types of pavement. Concentrations of lead, zinc and cod in runoff on asphalt pavement are 3 to 5 times higher than those on cement concrete pavement under the same conditions. With porous asphalt pavement, the concentration of pollutants in the runoff is greatly reduced; therefore, the development and use of various types of porous pavement is not only beneficial to traffic safety, but also conducive to drainage and reducing runoff pollution.

Environmental impact assessment reports of china's highway works mostly recommend lagoons for precipitation and purification for roads. Studies have shown that some non-structural measures, such as cleaning the road, limiting deicer usage, and some engineering measures such as vegetation control, wet detention pond, infiltration systems and wetlands system are effective measures to control pollution of surface receiving water from the runoff.

Artificial wetland system generates better purification for non-point source pollution caused by rainstorm runoff, but it requires a larger area and thus involves land acquisition problems and higher cost. If conditions permitted indeed, it may be employed.

Vegetation control (including overland flow and grass channel) measures are the most effective ones for filtering and adsorbing heavy metals, toxic organic compounds, ss, bod and bacteria, followed by artificial wetlands. Therefore, choosing the right plants and effective layouts is a more economical and feasible control method for road runoff pollution.

In 2012 edition, it propose measures of grass-type drains, closed drains, grass processing tanks, multifunctional processing tanks, artificial wetlands and dry sedimentation tanks for centralized treatment of water pollution caused by runoff, referring to purification results of various engineering measures, the using efforts in france, and some success cases such as artificial wetlands of guangzhou yu - zhan expressway, the combination measures of oil separation sedimentation tanks, vegetation control and artificial wetlands of guangyuan-nanchong expressway. All water treatment facilities shall be covered by grassing; it is not only beneficial for structures get harmony with the natural environment, but also a measure of long-term pollution control. On the bottom of the structure, a compacted clay layer of 30cm thick shall be paved for the control of water infiltration (the role of the clay layer focuses on "control" infiltration, it is different from the concept mentioned in the following contents which is referred to "anti-seepage measures").

Highway drainage on water environment sensitive sections shall be treated with different and suitable measures with principles of “drain by sections and treat by levels”, based on different environmental sensitivity.

Water resources classification

Water resources include surface water and groundwater. Surface water is present in the earth's crust surface, exposed in the air, i.e. The oceans, rivers, lakes, reservoirs, swamps and glaciers. Groundwater refers to various forms of water buried below the surface, in the presence of crustal rock pores, cracks, caves or voids in the soil. Function of water refers to drinking water, fish farming water, irrigation water and industrial water etc.; if there are several functions at the same waters, usually the highest function determines its category.

Surface water classification

Based on water environment functions and the protection objectives, and according to the level of

function, the environmental quality standards for surface water, (gb3838-2002) of china divides surface waters into five quality classes (each class is different in terms of ph value, dissolved oxygen and harmful substances content etc.):

Class i - mainly refers to the source of water, national natural reserves;

Class ii - mainly refers to level a protection area for surface water source of centralized drinking water, rare aquatic habitats, fish and shrimp spawning grounds, larvae feeding ponds;

Class iii - mainly refers to level b protection area for surface water source of centralized drinking water, fish and shrimp wintering ponds and migration routes, aquaculture fishery waters and swimming area;

Class iv - mainly refers to general industrial water areas and recreational water areas where without direct contact with the human bodies;

Class v - mainly refers to agricultural water area and the landscape waters with general requirements.

2.2.2 seawater classification

Based on sea functions and the protection objectives, the sea water quality standards (gb 3097-1997) of china divide sea waters into four quality classes (each class is different in indicators of the floating substances, dissolved oxygen and bacteria levels, etc.,):

Class i – refers to marine fish area, marine sanctuaries and rare and endangered marine life protected areas;

Class ii – refers to aquaculture areas, the beach, sea sports and entertainment area where the human body directly contact with sea water, as well as industrial water zone directly related to human consumption;

Class iii – refers to general industrial water zone, the coastal tourist area;

Class iv – refers to marine port waters, marine developmental areas.

Concepts of water environment sensitive sections

Water environment sensitive sections: road sections go through the class i- iv waters specified in the environmental quality standards for surface water, (gb3838) and the quality standards of groundwater (gb/t 14848) and the class i-iii seas specified in sea water quality standards (gb 3097).

Referring to the french standards approaches, edition 2012 specifications subdivides the water environment sensitive sections into three levels, in accordance with the sensitivity and importance degrees of waters crossed:

Table 1 classification standards of water environment sensitive sections

codes referred	*Environmental quality standards for surface water*, (gb3838) and the *quality*	*Sea water quality standards*

Sensitivity level	*standards of groundwater* (gb/t 14848)	(gb 3097)
Strong sensitive	Class i-ii	Class i
Medium sensitive	Class iii	Class ii
Weak sensitive	Class iv	Class iii

Drainage design keys on water environment sensitive sections

water environment strong sensitive sections

general principles

The sensitivity of such area is quite high on ecological and functional aspects. When drainage designing, water on road (bridge) surface shall be separated from water in subgrade and treated with appropriate anti-leakage measures respectively, relying on the different contents of pollutants which is higher on surface. Water collected from road and bridge surface shall be centralized and drained nearby.

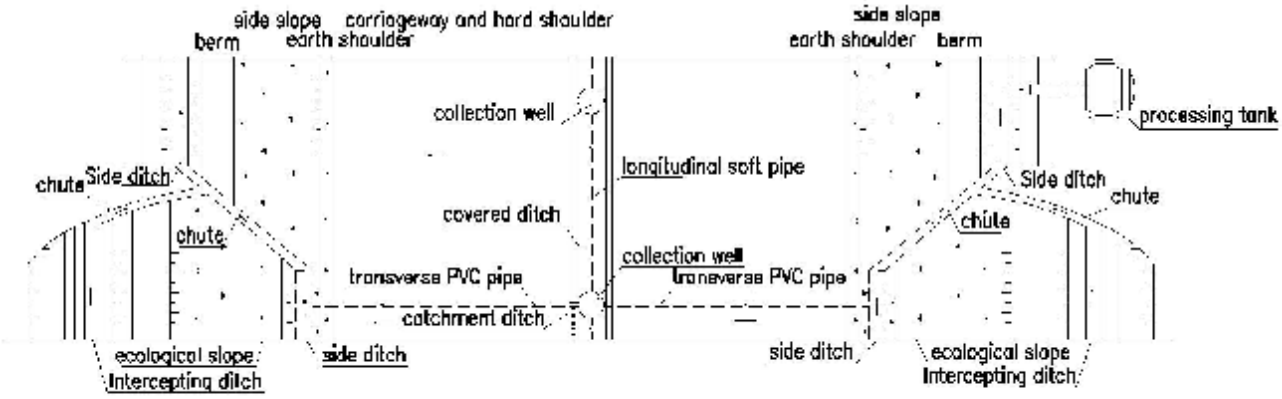

Fig.1 Drainage and Water Treatment in Water Environment Strong Sensitive Sections

Notices for collection of road (bridge) surface water

On water environment strong sensitive sections, water on road and bridge surface shall be collected and drained into processing tanks by using u-shaped concrete channel or slot-type tube on earth shoulders and arranging longitudinal collector pipes on decks.

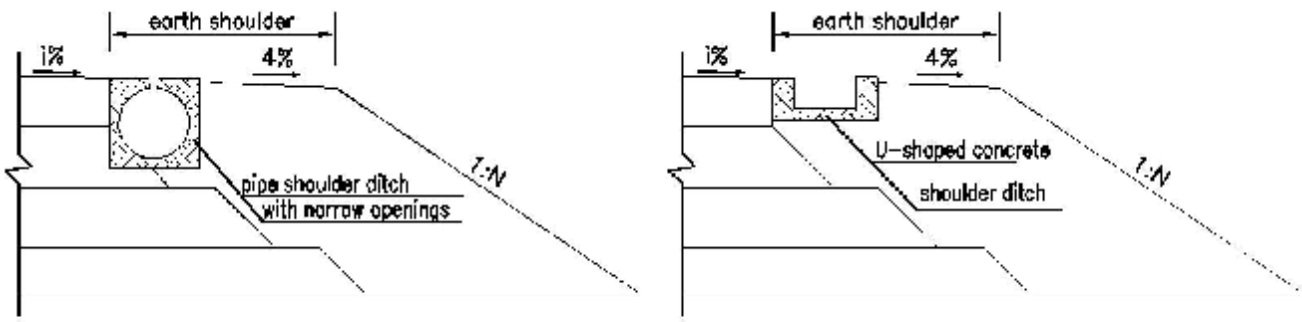

Fig.2 Road Surface Water Collection System

Drains on the toes of fill embankment are not employed for surface water collection because

infiltration on the slope will occurs when the water is overflowing from the road surface to drains. Concrete consolidation may be employed for anti-seepage of collection pipes or trenches, and waterproof geotextile may be paved on the bottom of treatment ponds for anti-seepage.

Notices of water treatment facilities

On water environment strong sensitive sections, with comprehensive considerations especially on its higher requirements of water discharge, multifunctional processing ponds, artificial wetlands or dry sedimentation tanks shall be used for centralized treatment facilities for water on road and bridge surface.

Multifunctional processing tank consists of inlet devices, water tanks, outlet devices, a bypass system and maintenance roads. It can be used when catchment area is greater than 1 hectare on water environment strong and medium sensitive areas. Around the tank, a maintenance road at least 4.0m wide must be built. A passage reaching the bottom of tank at least 3.50m wide and with a slope not greater than 15% must be built for maintenance machinery working on the bottom (cleaning water plants and silt). The length-width ratio of the tank shall not be less than 6, and the inlet devices shall be kept away from the outlet devices as much as possible, which is beneficial for impurities deposition. Isolation fences around the tank are necessary.

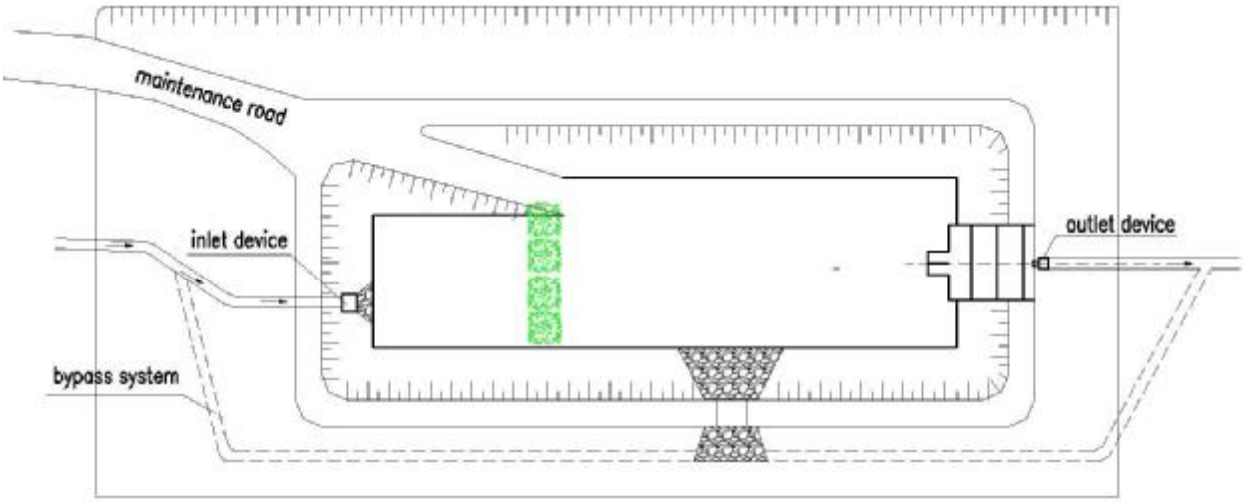

Fig.3 Plan View of Multifunctional Processing Tank

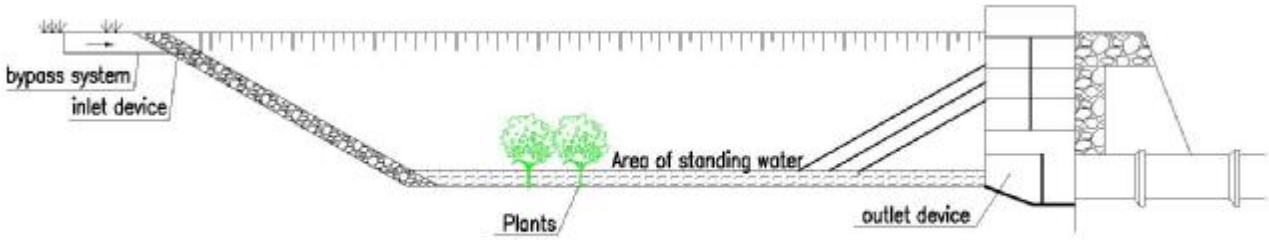

Fig.4 Profile View of Multifunctional Processing Tank

Dry sedimentation tanks consist of inlet devices, percolation tanks, outlet devices, a bypass system and maintenance roads. Such sedimentation tanks are employed when there may be uncontrollable potentially hazards (odor, mosquitoes etc.) On water-standing areas of grassing processing tanks and multifunctional processing tanks, especially in urban and suburban areas or hot areas where such hazards may lead inconvenience.

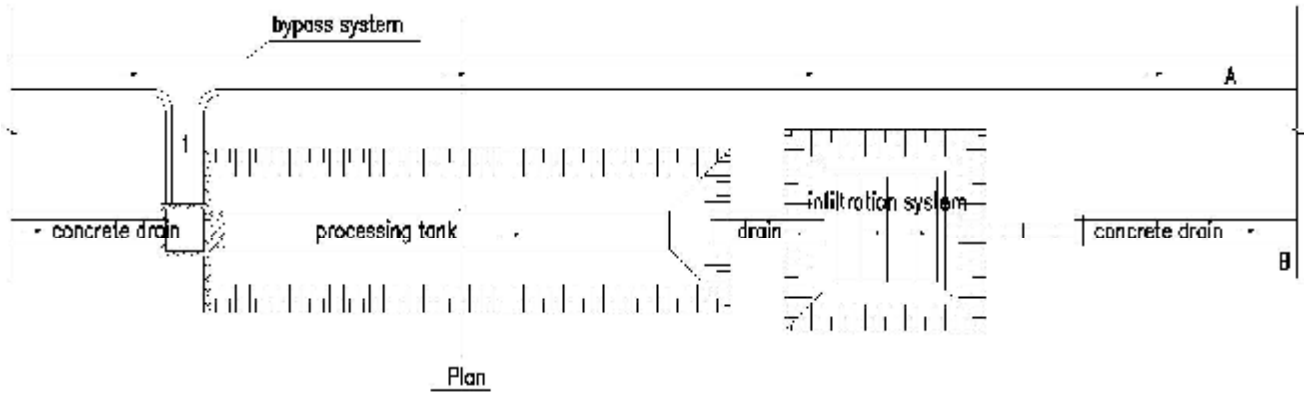

Fig.5 Plan View of Dry Sedimentation Tank

A: the bypass system for temporarily drain of excessive water, B: infiltration system.

Water environment medium sensitive sections

General principles

The sensitivity of such area is moderately high on ecological and functional aspects. When drainage designing, water on road (bridge) surface should be separated from water in subgrade and treated with appropriate anti-leakage measures respectively, relying on the different contents of pollutants which is higher on surface. If separation is difficult, water shall be (mixing) collected and drained nearby.

Notices for collection of road (bridge) surface water

On water environment medium sensitive sections, the draining of pavement water and subgrade water should be separated. After separation, water from road and bridge surface shall be centralized and drained after treatment. When mixing draining water from the pavement and subgrade, water within road boundary cannot be overflowed into the natural environment, it must be collected, centralized and treated before discharging.

Notices of water treatment facilities

On water environment medium sensitive sections, with comprehensive considerations, multifunctional processing ponds, artificial wetlands or dry sedimentation tanks should be used for centralized treatment facilities for water on road and bridge surface. Otherwise, grassing processing tank may also be used if the former facilities are difficult for implementation or if cost limited. Side ditches and drains collecting water within the road boundary shall be grassed as much as possible, for purification and precipitation when catching water. The processing tanks should be anti-seepage.

Grass processing tanks consist of inlet devices, water tanks, outlet devices and the bypass system.

It is suitable for medium sensitive areas where catchment area is no larger than 1 hectare. The presence of standing water can delay the spread of pollutants, and can also play a role in precipitation; siphon baffle at the outlet of oil-water separation device can perform the separation; pollution caused by contingencies can be cut off by closing the inlet and outlet valves. The size of the processing tank shall be enough for maintenance equipment operation. The bottom shall be level, with a length of 80m ~ 100m and a width of about 1.5m; the height of standing water is around 0.5m, and for running water the height is 0.5m ~ 1.0m.

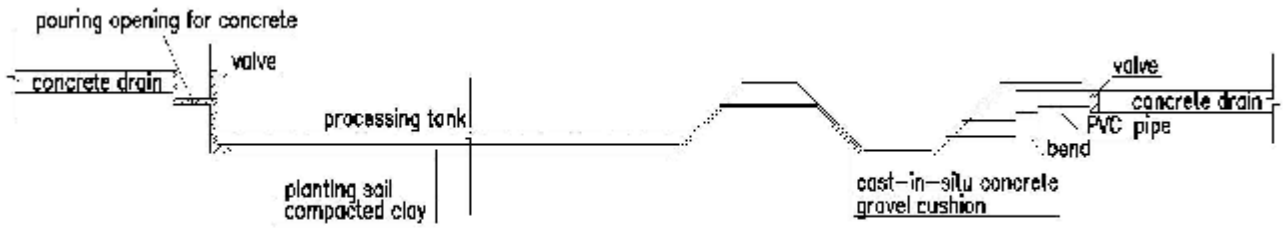

Fig.6 Grass Processing Tank

Water environment slightly sensitive sections

General principles

The sensitivity of such area is moderately low, where decentralized drains won't influence the water environment too much. Some slight influences may be reduced gradually by using eco-filtration and absorption. Pollutions caused by contingencies may be treated by using excavation of pollutes and arranging isolation fences and other effective measures. Therefore, road surface water on the section may be decentralized drained. If conditions limited, grassing shall be considered first in drain facilities (side ditches and drains), thus for absorbing and precipitating water standing on pavement to the largest extent. If the longitudinal gradient is greater (than 10%), in order to avoid erosion, consolidation measures such as mortar rubble, cast-in-situ (precast) concrete may be considered.

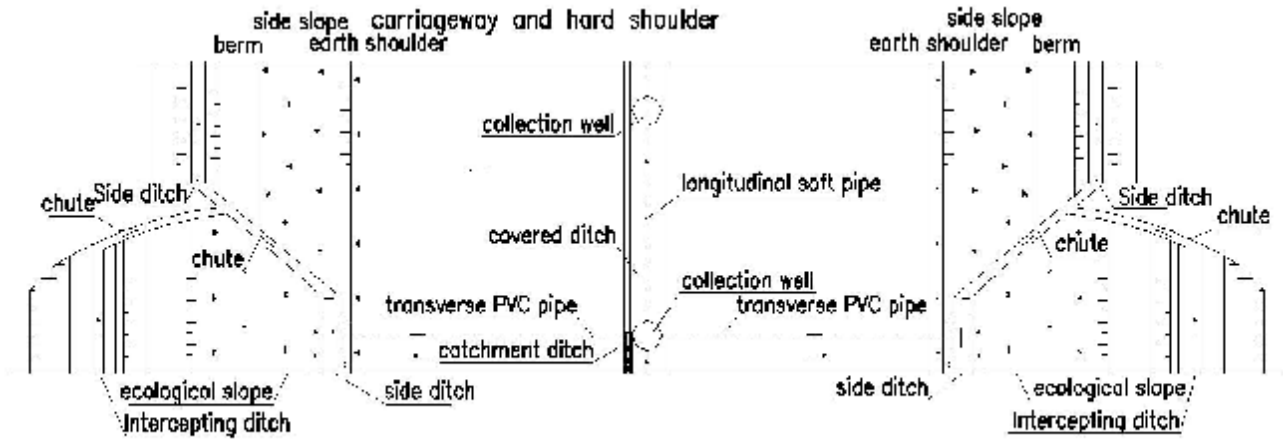

Fig.7 Drainage and Water Treatment in Water Environment Slightly Sensitive Sections

Notices of water treatment facilities

When the local government, the project employer or nearby residents request, it could be considered to collect road boundary surface water into side ditches and drains, treat with grassing or closed drains before discharging. Anti-seepage measures are not necessary for drains.

Grassing drains: mainly collecting subgrade sewage, consist of vegetation soil on the top (at least 200mm deep) + low permeability protection layer at the bottom (permeability coefficient k is less than 10^{-7}m/s, at least 200mm deep). It can weaken the influence of pollution led by runoff and accidents and thus slow down the transport of pollutants. It is suitable for water environment slightly sensitive areas.

Closed drains: is mainly used for delaying the spread of pollutants. Space for water standing is approximately d40m^3, where the standing water evaporates, is infiltrated underground and absorbed by water plants in the drains. The size of the drains shall be enough for maintenance equipment operation, with a length of 80m ~ 100m, a width of 1.5m on the bottom, and a height of 0.5m for standing water. It is suitable at water environment slightly sensitive areas.

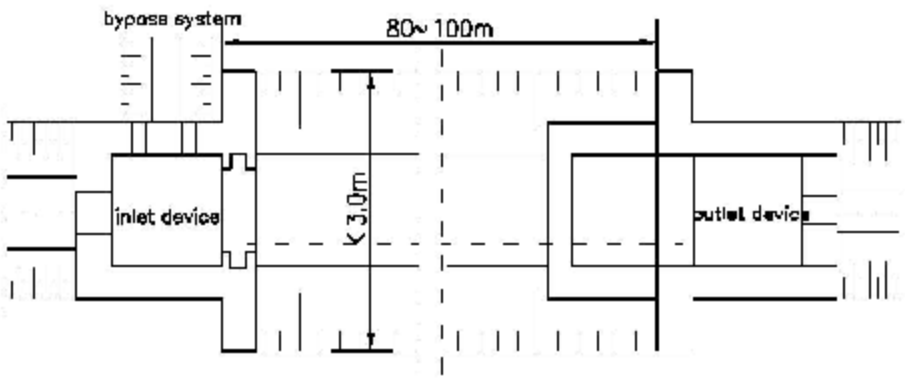

Fig.8 Plan View of Closed Drains

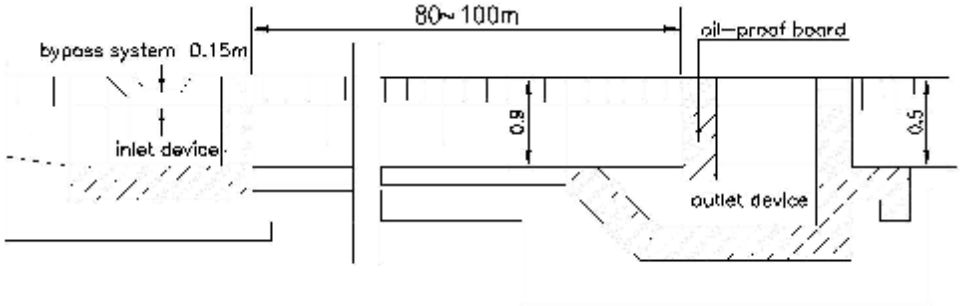

Fig.9 Profile View of Closed Drains

Discharging standards

The design specifications of highway environmental protections (jtg b04) released by the mot of china specifies that: the treatment and disposal of sewage from facilities along the road shall be determined according to the function of the receiving water body. If the sewage will be used for irrigation, it shall meet the requirements specified in the standards for irrigation water quality (gb 5084). If the sewage will be recycled, it shall, by functions respectively, satisfy requirements in the reuse of urban recycling water – water quality standards for urban miscellaneous water consumption (gb / t 18920), the reuse of urban recycling water – water quality standards for scenic environment use (gb / t 18921), the reuse of urban recycling water – water quality standards for industrial use (gb / t 19923) and the reuse of urban recycling water – water quality standards for groundwater recharge (gb / t 19772).

Trend forecast for the next edition of the specifications

Compared with the 1997 edition, the 2012 edition contains the theory for combining drainage and water treatment; however, there is no detailed requirement. In the next edition, it is forecasted that water treatment will be specified more clearly for further completion of highway drainage design on water environment sensitive sections, referring to domestic and international standards and specifications, such as the french *technical guides for road water treatment*, the usa's *drainage design manual*, the british *design manual for roads and bridges (drainage part)* and china's *outdoor drainage design specifications* and *railroad water supply and drainage design specifications*, as well as learning the sponge city's low-impact development (lid) contents and measures (drainage design for roads and greening).

In 2012 edition, innovative materials and technologies in the field of highway waterproofing, drainage and water treatment in recent years (after 2012) are not adequately covered, which are forecasted to be supplemented in the next edition of drainage specifications..

References

[1] fascicules du cahier des clauses techniques générales (cctg), volume 70, drainage network and ancillary works, [s]

[2] drainage routier-guide technique [s], sétra, 2006, page 91.

[3] assainissement routier-guide technique [s], sétra, 2006, page 92.

[4] environmental quality standards for surface water, (gb3838-2002) [s], the ministry of environmental protection of the people’s republic of china and the general administration of quality supervision, inspection and quarantine of the people's republic of china(aqsiq), 2002, page 16.

[5] sea water quality standards (gb 3097-1997) [s], the ministry of environmental protection of the people’s republic of china and the state oceanic administration of the people’s republic of china, 1998, page 9.