ATLANTIS PRESS
Advances in Engineering Research, volume 163
7th International Conference on Energy, Environment and Sustainable Development (ICEESD 2018)

The physical investigation on the Reflection coefficient of Pile-supported vertical wall breakwaters

KeXinZhang[1,a], JinSongGui[1,b,*] and DongXuWang[1,c]

College of Ocean and Civil Engineering, Dalian Ocean University, Dalian Liaoning116023, China

[a]Email:949842426@qq.com

[b]Email:guijs@163.com (*corresponding author)

[c]Email:21140216@qq.com

Keywords: reflection coefficient, Pile-supported vertical wall breakwaters, model test

Abstract: Through the physical model test, the reflection coefficient of pile-supported vertical wall breakwater under the action of regular wave was measured. The non-dimensionality method was used to analyze the change of reflection coefficient under the influence of various factors, thus giving the engineering Practical significance.

Introduction

Pile-supported vertical wall breakwaters have been widely used in recent years due to their advantages of simple structure and low cost. When incident waves impinge on the embankment, some of the energy appears as reflected waves when it meets the platform and the baffle[1] .Therefore, the reflection coefficient is an important parameter of this type of breakwater, which affects the wave height and the stability of the ship in the harbor area. The pile-based baffle-piercing breakwater can reflect the energy of the incident wave to reduce the damage of the wave to the port and the coast. If the reflection coefficient is too large, the bottom water velocity in front of the foundation of the breakwater is also large and must be protected and reinforced. Accurate analysis of wave reflection characteristics is of great significance for the design of coastal structures. The factors affecting the reflection coefficient mainly include wave height, wavelength, bank width, etc. Since the research on the direction of the reflection coefficient is relatively small, this paper is based on physical model experiments, and mainly discusses the influence of relative bank width and relative wave height on the reflection coefficient.

Experimental equipment and experimental setup

Laboratory equipment

Experiment flume

The physical model test was conducted in a wave tank in Dalian Key Laboratory of Coast Engineering of Dalian Ocean University. The effective size of the sink is 40m long, 0.7m wide and 1.0m deep, and can accommodate a maximum water depth of 0.7m. One end of the sink is equipped with a wave maker (1.0m×0.7m). The energy dissipation equipment such as vertical energy dissipation grids and energy dissipation overhead slopes are installed at the rear of the wave maker and at the tail of the sink to avoid reflection of waves.

Wave measurement

The wave measurement uses the DS30 wave height and water level measuring system developed

and produced by the Tianjin Institute of Hydraulic Science. The system can simultaneously measure multi-point wave surface processes and perform data analysis.

3Data collection

Adopting the wave data acquisition technology of the China Institute of Water Resources and Hydropower Research DJ800 multi-functional monitoring system, it takes approximately 400 μs to acquire data from one measurement point. Therefore, the sampling frequency decreases as the number of measurement points increases.

Experimental setup

The vertical profile of the experimental layout and related models are shown in Figure 1. A total of four waves were placed. Before the model, wave probe 1 and 2 were used to measure the wave height in front of the embankment. Wave probe 3 and 4 are used to measure the height of waves after the embankment. Experiments were performed twice and averaged.

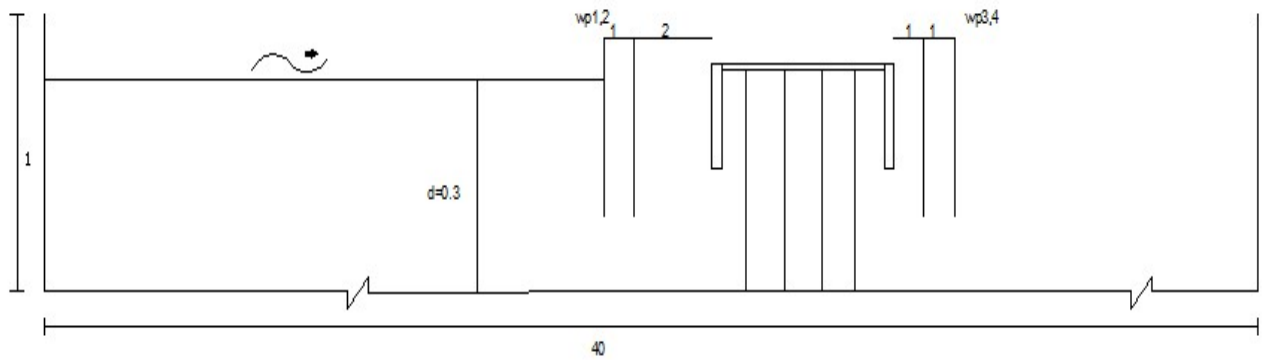

Fig.1.Wave flume profile and model layout [wp=wave probe, unit:m]

Experimental parameters

In this test to maintain the bank width B = 70cm and water depth d = 30cm are unchanged, the wave elements used in the test in Table 1. Before and after the baffle into the water depth shown in Table 2.

Table.1. Wave property[Unit: cm]

Wave length L/cm	Wave period T/s	Wave height H/cm
137	1	4/6/8/10/13
177	1.2	4/6/8/10/13
289	1.8	4/6/8/10/13

Table.2.Front and rear baffle into the water depth[Unit: cm]

front barrier[cm]	rear barrier[cm]
2.5	5/7.5/10
5	5/7.5/10
7.5	7.5/10
10	10

Experimental results and discussion

Reflection coefficient Kr is equal to the ratio of the reflected wave height to the incident wave

height. The Goda two-point method separates the reflected wave height from the incident wave height, and then calculates the reflection coefficient Kr.

B/L effect on the reflection coefficient

According to previous studies, it has been found that B/L has an effect on the transmission coefficient, that is, as the B/L increases, the smaller the transmission coefficient, the larger the reflection coefficient. The influence of the transmission coefficient B / L on Kr is shown in Fig. 2, 3.

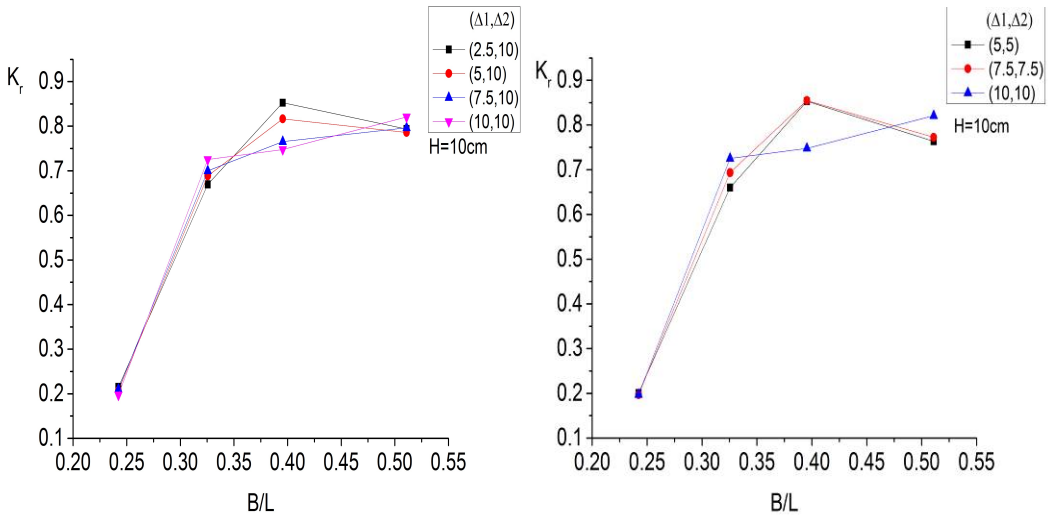

Fig.2,3. effect on the reflection coefficient[unit:cm]
[(Δ1,Δ2)=Before and after the baffle into the water depth]

1. First, Kr does not change as a single straight line with increasing B/L. As B/L increases, the reflection coefficient Kr increases. This is because when the bank width is constant, as the wavelength decreases, the transmission coefficient of the waves is decreasing, which affects the increase of the reflection coefficient.
2. It can also be seen that the magnitude of increase is decreasing, and it begins to fall after reaching a certain value. As can be seen from the two figures, the depth of water entering the changing baffle has no significant influence on the reflection coefficient in the ratio of 0.24 to 0.34. Therefore, in the project, the reflection coefficient should not be changed by changing the baffle inlet depth.
3. When the depth of water entering the front and rear baffles is the same, the Kr of (10, 10) is relatively small and becomes gentler after 0.34.
4. From the two figures, it can be seen that 0.4 is an important inflection point. After B/L reaches 0.4, Kr shows a decreasing trend, which proves that the ratio of bank width to wavelength is not more than 0.4 is appropriate.

Δ/H effect on the reflection coefficient

Relative wave height affects the degree of interaction between the wave and the baffle. As H/d increases, the more severe the effect, the more energy is dissipated, and the smaller the reflection coefficient is. The effect of H/d on Kr is shown in Fig,4,5,6.

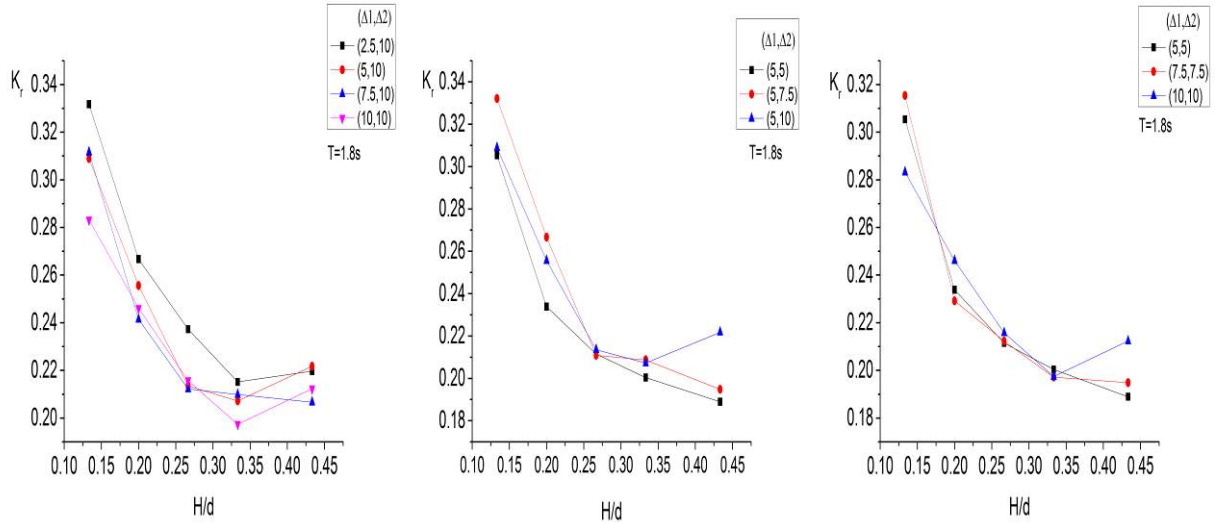

Fig.4,5,6. effect on the transmission coefficient[unit:cm]
[(Δ1,Δ2)=Before and after the baffle into the water depth]

1. On the whole, as H/d increases, Kr decreases, and the slope of decrease decreases. In Figure 1, Figure 2, in the 0.12 ~ 0.28 area, the reflection coefficient decreased significantly, in the range of 0.28 ~ 0.45, Kr is relatively flat. When the water depth of the baffle is constant, increasing the depth of water entering the front baffle will reduce Kr.
2. In Fig. 3, when the current water depth of the tailgate is the same, the transmission coefficient shows a tendency to decrease.
3. It can be seen from the comparison between Figure 3 and Figures 1 and 2 that when the front and rear baffles are in agreement, the reflection coefficient is not much different.

Conclusion:

It can be seen from the experiment that Kr is non-linearly related to B/L. In the area where the ratio is between 0.24 and 0.34, the depth of water entering the changing baffle has no significant effect on the reflection coefficient. Therefore, in the project, the size of the reflection coefficient should not be changed by changing the baffle inlet depth. When the depth of water entering the front and rear baffles is the same, the Kr of (10, 10) is smaller and becomes gentler after 0.34. 0.4 is an important turning point. After B/L reaches 0.4, Kr shows a decreasing trend. It is proved that the ratio of dike width to the wavelength should be not more than 0.4.

The relationship between Kr and H/d is also non-linear. As H/d increases, Kr decreases. In the area of 0.12~0.28, the reflection coefficient decreases obviously. Within 0.28~0.45, Kr is relatively flat. When the depth of water entering the baffle is constant, increasing the depth of water entering the front baffle will reduce Kr. From the perspective of decreasing Kr, the front and rear baffles work well when they enter the same depth.

References:

[1] WeibingFeng,WenlinDing,XiaoHongYe.Research on wave-breaking characteristics of pier breakwater pier foundation breakwater:Water Transportation Engineering.2014.
[2] KeWang, WangXu. Transmission and reflection coefficients of flat and vertical wave breakwaters: Naval Mechanics, 2010.
[3] LiangJi, GuopingChen , ShichangYan , Experimental Study on Shearwater and Wave Reflection of Piers in Different Structures of the Fourth and Fifth Phases of Rizhao Port:Waterway

Engineering 2011
[4] LingyuZhou, LuDai, JinhaiZheng, ShichangYan, WeijieGong Experimental study on wave reflection height of wave reflection coefficient of perforated caisson pier with perforated upper structure :Water Transport Engineering 2013
[5] PengfeiLiu, YonghongZheng, LishengWang Research on the Characteristics of Transmissive Reflectance of Submerged Rectangular Breakwater:Ocean University of China, 2006.
[6] YulinTang, NingchuanZhang, AizhenLiu Experimental study on wave-removal performance of double horizontal plate type piercing breakwater:Waterway Port.2006.
[7] ZhiXiongMa,Experimental Research on Wave Breaking Performance of Breakwater Through Breakwater:Nanjing Water Institute 1-6(2002)
[8] DanJunYu, WeiBingFeng and YanBoLi,Test and Calculation of Horizontal Wave Pressure of Pierced Double Wall Breakthrough Breakwater:Waterway Engineering19-24(2015)
[9] Bennet G.S., Melver,P., Smallman,J.V.:A mathematical model of a slotted wave screen break-water:Coastal Engineering 234–249.(1993).
[10] YiXinYan, JinHaiZheng and XiaochuanZeng, Experimental Research on Wave Characteristics of Permeable Breakwater with Pile Foundation:Ocean engineering67-74(1998)