ATLANTIS PRESS

Advances in Intelligent Systems Research, volume 147

International Conference on Network, Communication, Computer Engineering (NCCE 2018)

Research on Plant Classification Based on Convolutional Neural Network

Zhe Wei

Beijing University of Technology, Beijing, China.

weizhe1128@163.com

Abstract. Reviewing the shortcomings of plant classification methods in recent years. The advantages of convolutional neural networks in image classification are briefly described. In order to classify plants simply and efficiently, a plant recognition method based on convolutional neural network was proposed. And we use it to verify on the data set. The results indicate a significant advantage over traditional algorithms.

Key words: Plant Classification, Convolutional Neural Network, Deep Learning.

INTRODUCTION

Plant classification has a certain role in promoting the popularization of related plant knowledge and the development of botany related disciplines, which plays an important role in identifying plant species, exploring the genetic relationship among plant species, and elucidating the evolutionary rules of the plant system. However, there are few talents engaged in the identification of plant species, and there is a continuous downward trend. Therefore, with the development of science, it is imperative to apply computer vision and pattern recognition technology to the field of plant identification. Plant leaves have unique characteristics due to their own genes, external environment and climate. Moreover, the plant leaves are easy to collect and have a flatness, which is suitable for computer image processing. Therefore, the leaf is usually used as a basis for plant species identification.

In recent years, many researches have been conducted on leaf recognition. Kumar et al. [1] proposed mobile app for recognize 184 kinds of trees by extracting the curvature features. Wang et al. [2] use Pulse-coupled neural network (PCNN) to extract leaf features. They achieve accuracy above 90% in three different datasets. While Hu et al. [3] applies Multiscale Distance Matrix to get geometric structure of the leaf shape.

For decades, research in the field of plant classification has made encouraging progress. But various problems exist. In the first step, the artificially set features are calculated from the input blade images. In the second step, a classifier is trained based on the obtained features to be used for the test data classification. The quality of this method depends largely on whether or not the characteristics of human choice are reasonable. However, people often rely on experience when choosing characteristics.

And they have great blindness. For this reason, this article will propose a plant classification method based on convolutional neural network, which makes up for the

CONVOLUTIONAL NEURAL NETWORK

Convolutional neural network is one of the deep learning models. It is a multilayered supervised learning neural network. It uses a series of convolutional layers, pooled layers, and a fully connected output layer to build a multilayer network to imitate the layer-by-layer processing mechanism of human brain perception of visual signals. The advantage of a convolutional neural network is that it does not require the extraction of specific manual features

for the image for a specific task but simulates the human visual system to perform hierarchical abstraction processing on the original image to generate classification results. This method makes the training parameters of the network greatly reduced compared with the neural network, and the image has a certain degree of translation, rotation and distortion invariance.

In the 1990s, Yann LeCun et al. established and improved the CNN structure and applied it to the recognition of handwritten numbers [4]. Since Krizhevsky et al. proposed an 8-layer deep convolutional neural network named AlexNet [5] in 2012, convolutional neural networks have made great progress in image recognition. Then emerged such as VGGNet [6], GoogleNet [7], etc. have achieved outstanding results in the ILSVRC competition.

Convolutional neural network does not need to know the exact mathematical expression between input and output in advance. As long as the convolutional neural network is trained in a known pattern, the input can be learned. A multilayer non-linear relationship between outputs that cannot be achieved by non-deep learning algorithms. The basic structure of a convolutional neural network is composed of a series of convolution and pooling layers and a fully connected output layer. Gradient descent can be used to minimize the error function to inverse the weight and threshold parameters in the network layer by layer. Adjust to get the optimal solution of network weights and thresholds and increase the accuracy of network training by increasing the number of iterations. A basic CNN framework is shown in Figure 1.

The CNN framework consists of two convolutional layers and two subsampling layers alternately. C is a convolutional layer, also known as a feature extraction layer. The input of each neuron is connected to the receptive field of the previous layer and the local feature is extracted. Once the local feature is extracted, the positional relationship between it and other features is also determined. There are a number of different 2D feature maps in the C layer. A feature map extracts a feature. When extracting features, the weights of the same feature map are shared. The same

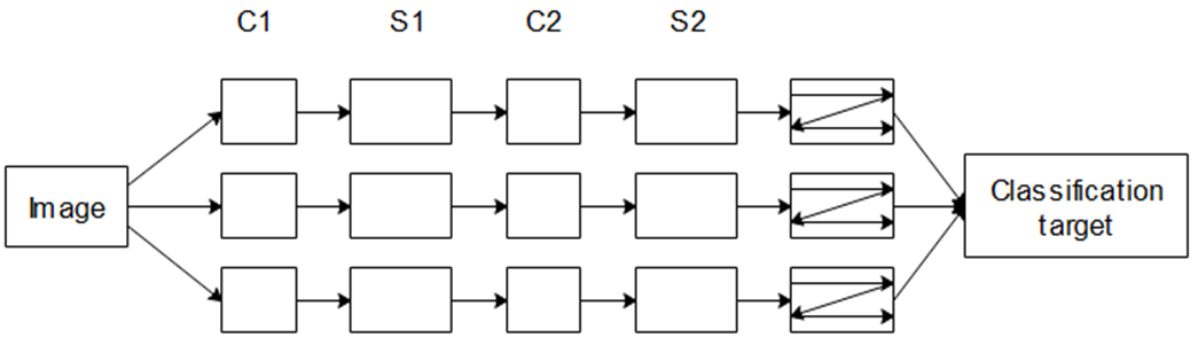

FIGURE 1. A Basic CNN Framework

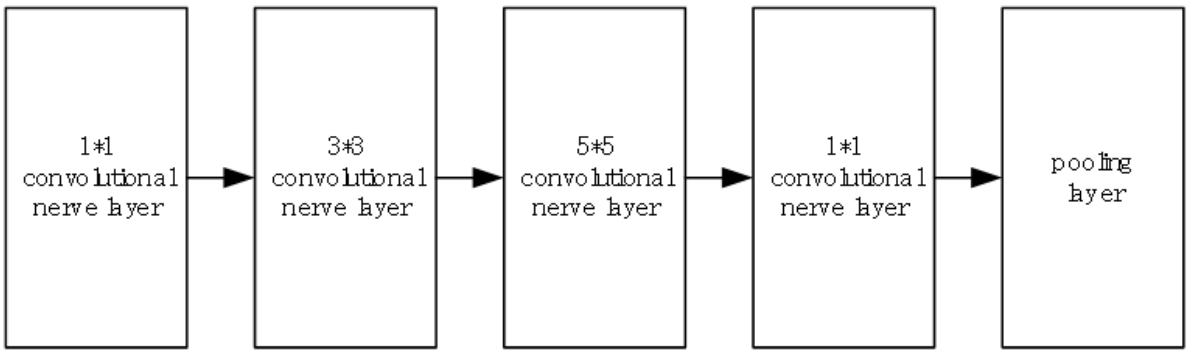

FIGURE 2. Introduced Structure

convolution kernel is used, and different feature maps use different convolution kernels. The C layer saves different local features so that the extracted features have

rotation and translation invariance. The layer subsampling layer identified by S, also called the feature mapping layer, is responsible for sub-sampling the features obtained in the C layer so that the extracted features have scaling invariance. The S layer only performs simple scaling mapping. The number of neurons that need to be trained is relatively small, and the calculation is relatively simple. At the end of the CNN, there are generally several full-connection layers. The number of final output nodes is the number of classification targets. The purpose of training is to make the CNN output as close as possible to the original label.

EXPERIMENT

Dataset

We train the network using Flavia dataset, which is a popular dataset for leaf recognition. It is publicly available and consists of 32 plants classes. Each image contains a single leaf and the number of images in the dataset is 1907. To make it work with previous model, we rescaled all image dimension to 224x224.

Network Structure

In the literature [2], The classic convolutional neural network uses a large 11×11 convolution kernel. This design can effectively "abstract" the image, but there are many parameters for training, which limits the performance of the overall algorithm. In order to improve the performance of the algorithm and increase the depth of the neural network, we use a convolution kernel with a smaller convolutional layer. At the same time, in order to be able to easily adjust the algorithm and take into account the scalability of the algorithm, the introduced structure should be directly superimposed without having to introduce a new neural layer. For this reason, the new structure introduced in this article is shown in Figure 2.

The result of each convolutional layer is not directly passed to the next layer but is first calculated by an activation function and then used as the characteristic value of a certain neuron. The activation function selects the ReLU function.

At the beginning and end of the structure, there is a 1x1 convolution kernel, which can be directly connected to the nerve layer using any convolution nuclei by using the 1x1 convolution kernel. In the middle, a neural layer of 3×3 convolution kernel and 5×5 convolution kernel is used, which can effectively extract image feature values and ensure that such structures do not introduce too much of the same as large convolution kernels. We have also tried to use the nerve layer of other size convolution kernel; the effect is inferior to the structure in Figure 2.

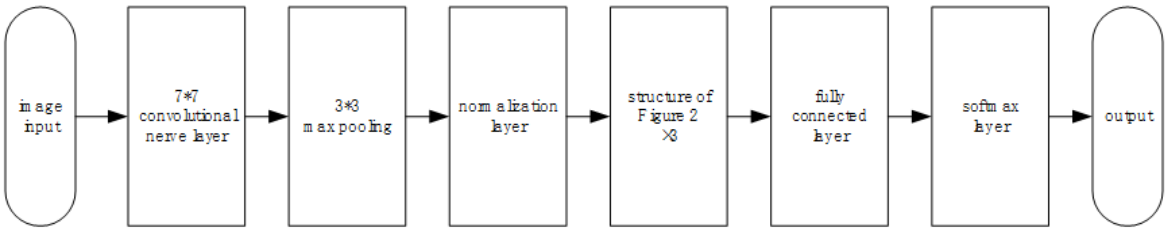

FIGURE 3. Overall Network Structure

In the initial trial phase, we tried to use the structure introduced in Figure 2 four times, but the training time was too long. Using the structure of Figure 2 three times, training time is acceptable, but the results obtained are not ideal. Therefore, in the final design of the structure, consider replacing the original structure with a neural layer with a 7×7 convolutional kernel, which can not only ensure that the training time is not too long, but also can effectively reduce the error rate. To this end, the overall structure of the network is designed as shown in Figure 3. After the convolutional nerve layer, the traditional fully-connected neural network and SoftMax regression are used.

Compared with the classical convolutional neural network, the structure of Figure 3 is easier to adjust. As long as the computational resources allow, the structure introduced in Figure 2 can be added to the network. At the same time, such a structure is more abstract in terms of the feature values of the extracted images.

Result

In the experiment, Images are selected randomly for testing. Our system shows that by using the images in the Flavia dataset which contains 1907 images, it can already achieve the accuracy of 96.7%. Comparison with other sechemes is shown in Table I. It means that network can outperform the results from other schemes. By using convnet, leaf recognition can be done automatically. Extracting the leaf shape, diameter, aspect ratio, etc. is no longer needed.

CONCLUSION

In this paper, based on the study of convolutional neural networks, a method of recognizing plant leaves is proposed. The traditional recognition method artificially extracts features based on experience, and then classifies them according to the characteristics. It has blindness, complexity, and low level of classification. The method proposed in this paper is a good complement to the shortcomings of the traditional methods, and the experimental results prove the reliability and efficiency of the method. For future works, we will develop a system that can recognize leaf image under more general conditions.

TABLE 1. Comparison with other schemes

Scheme	Accuracy (%)
PNN in [2]	90
MLNN in [8]	94
CNN in [9]	94.6
Our work	96.7

REFERENCES

1. Kumar N, Belhumeur P N, Biswas A, et al. Leafsnap: a computer vision system for automatic plant species identification[C]// European Conference on Computer Vision. Springer-Verlag, 2012:502-516.
2. Wang Z, Sun X, Zhu Y, et al. Leaf recognition based on PCNN[J]. Neural Computing & Applications, 2016, 27(4):899-908.
3. Hu R, Jia W, Ling H, et al. Multiscale distance matrix for fast plant leaf recognition[J]. IEEE Transactions on Image Processing A Publication of the IEEE Signal Processing Society, 2012, 21(11):4667-4672.
4. Bengio Y, Lecun Y. Convolutional Networks for Images, Speech, and Time-Series[J]. 1995.
5. Krizhevsky A, Sutskever I, Hinton G E. ImageNet classification with deep convolutional neural networks[C]// International Conference on Neural Information Processing Systems. Curran Associates Inc. 2012:1097-1105.
6. Simonyan K, Zisserman A. Very Deep Convolutional Networks for Large-Scale Image Recognition[J]. Computer Science, 2014.
7. Szegedy C, Liu W, Jia Y, et al. Going deeper with convolutions[C]// IEEE Conference on Computer Vision and Pattern Recognition. IEEE Computer Society, 2015:1-9.
8. Du J, Huang D, Wang X, et al. Shape Recognition Based on Radial Basis Probabilistic Neural Network and Application to Plant Species Identification[M]// Advances in Neural Networks – ISNN 2005. Springer Berlin Heidelberg, 2005:811-811.
9. Zhang C, Zhou P, Li C, et al. A Convolutional Neural Network for Leaves Recognition Using Data Augmentation[C]// IEEE International Conference on Computer and Information Technology; Ubiquitous Computing and Communications; Dependable, Autonomic and Secure Computing; Pervasive Intelligence and Computing. IEEE, 2015:2143-2150.