ATLANTIS PRESS
Advances in Engineering Research, volume 159
8th International Conference on Applied Science, Engineering and Technology (ICASET 2018)

Flue Desulphurization Spray Device

Chunpeng Wang[1,a,*], Lijian Zhang[1,b], Tingting Wang[2,c]

[1]College of Electrical Engineering, Binzhou Polytechnic, Shandong, 256603, China

[2]Bohai Piston Co.,Ltd, Binzhou, Shandong, 256603, China

[a]fuwa08@163.com, [b]41350992@qq.com, [c]1653226361@qq.com

Abstract: Industrial waste gas contains a lot of harmful substances, and in the process of waste gas treatment, dust removal and desulfurization are two important links. Current netease blockage of dust removal equipment, dust removal efficiency is low, because use spray desulfurization in desulfurization device at the same time, the catalyst is not fully contact with the air so2 and spray, catalytic effect is poorer, the desulfurization efficiency is low. In this paper, a kind of flue desulfurization and dust spraying device is provided to solve the defects in the existing technology, and the structure principle is described in detail.

Keywords: Exhaust, Dust removal device, Desulfurization device, Spray

Introduction

Summary in exhaust gas treatment process, dust removal and desulphurization is an important link, netease blockage of the current dust removal device, dust removal efficiency is low, because use spray desulfurization in desulfurization device at the same time, set the catalytic plate efficiency, the catalyst is not fully contact with the air so2 and spray, catalytic effect is poorer, the desulfurization efficiency is low.

Device

The first powerful suction fan connected the first one to take over, the first one to take over the connected desulfurizer, desulfurization device installed inside cylinder, cylinder wall to the hollow structure, cylinder filling catalyst, drum set on the wall of hole, the top of the cylinder installation ammonia water nozzle, desulfurization device is installed at the top of the second powerful suction fan, the second powerful suction fan connected exhaust pipe, the utility model through the layers of filtering can effectively improve the efficiency of dust removal; Meanwhile, the catalytic efficiency is improved by using the cylinder to make the catalyst fully contact with ammonia and sulfur dioxide.

Flue dust spray device, which comprises a dust removing device (1) and (2), desulfurization dust removing device (1) and the lower part of the first connecting pipe (3) connected at one end of the first connecting tube (3), the other end is communicated with the flue pipe, the first (3) is provided with a first control valve (4) and pump (5), dust removal device (1) are arranged from top to bottom in the first dust filter (6), second (7) of dust filters and third dust filters (8), the first dust filter (6), second (7) of dust filters and third dust filters (8 the mesh diameter decreasing), dust removal device (1) installed at the top of the first suction fan (9), the first strong suction fan (9) connected with the second connecting pipe (10) at one end of the connecting pipe (10, second) and the other end of the desulfurization device (2). The lower part connected desulfurization device (2) arranged in a plurality of horizontal cylinder set (11), a cylinder (11) of the cylinder wall is a hollow structure,

the cylinder (11) of the cylinder wall filled with catalyst (12), (11) the inside of the cylinder wall and the outer side of the cylinder wall is provided with a plurality of through holes (13), (12) the catalyst particle size is larger than the hole diameter of cylinder (13), (11) the above desulfurization device (2) of the inner wall (2) installed on the number of ammonia nozzle (14), desulfurization device (2) mounted on the top of the second strong suction fan (15). Second strong suction fan (15) connected to the exhaust pipe (16), (2) at the bottom of the desulfurization unit and the first discharge pipe (17) is connected, the first discharge pipe (17) connected to the other end of the first sewage pump (18), the first sewage pipe (17) is provided with second control valves (19) first, sewage pump (18) communicating with the top end of the ammonium salt storage device (20).

The utility model relates to a flue desulfurizing, dust removing and spraying device, which is characterized in that the first dust collecting filter screen (6), the second dust removing filter screen (7) and the third dust removing filter screen (8) are all cone shaped.

The utility model is characterized in that a plurality of cleaning nozzles (21) are arranged on the inner wall of the dust removing device (1) of the first dust collecting filter screen (6), the second dust removing filter screen (7) and the third dust removing filter screen (8).

The dust removal device is characterized in that: (1) second sewage pipe is communicated with the bottom end (22), second (22) sewage pipe connected with the other end of the second sewage pump (23), second (22) is arranged on the discharge pipe third control valve (24), second (23) sewage pump storage device and impurities (25) the top connected.

It is characterized in that both ends of the cylinder (11) is provided with a fixed rod (26), a fixed rod (26) the central position of the connecting shaft (27) at one end of a rotating shaft (27) and the other end of the motor (28) of the output shaft, the motor (28) and 2 (desulfurization unit the inner wall is fixedly connected), a shaft (27) and the other end of the desulfurization device (2) the inner wall of the rotary connection.

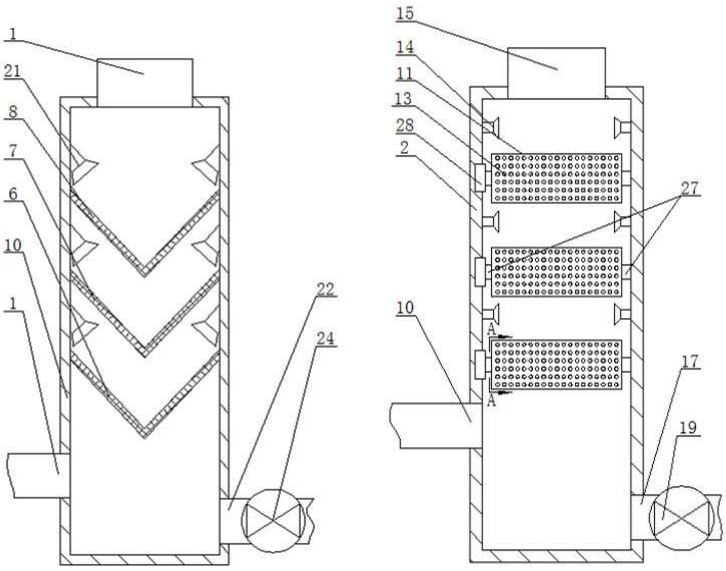

Fig. 1 dust removing and spraying device

Programme

The dust removal device and the first connecting tube is connected, the other end is communicated with the first connecting flue pipe, the first pipe is provided with a first control valve and the pump, dust removing device are arranged from top to bottom in the first dust filter, second dust filters and third dust filter, dust filter, the first second dust filters and third dust the filter mesh

diameter decreasing, the top dust removal device installed the first powerful suction machine, the first second strongly connected connecting pipe suction fan is connected with the other end of the lower connecting pipe of the desulfurization unit second, desulfurization device installed inside the cylinder number of laterally disposed, inner wall of the cylinder is a hollow structure the inner wall of the cylinder filling catalyst inside the cylinder wall and the outer side of the cylinder wall is provided with a plurality of through holes, catalyst particle size greater than. The hole diameter, number of ammonia desulfurization unit arranged the upper part of the inner wall of the cylinder, the top desulfurization device installed second strong suction fan second strong suction blower is communicated with the exhaust pipe, desulfurization device communicated with the bottom end of the first discharge pipe, the other end is connected to the first the first sewage pump sewage pipe, the first sewage pipe on top of the first set of second control valves, sewage pump and salt storage device connectivity.

As above, a flue desulfurization, dust removal and spraying device, the first dust removal filter net, the second dust removing filter net and the third dust removing filter screen are all cone shaped.

The utility model is characterized in that a plurality of cleaning nozzles are arranged on the inner wall of the square dust removing device of the first dust removing filter screen, the second dust removing filter screen and the third dust removing filtering net.

As a kind of flue dust spray device, dust removing device is communicated with the bottom end of the second sewage pipes, sewage pipe second is connected with the other end of the second sewage pump, second sewage pipe is provided with third control valve, the top second sewage pump storage device connected with impurities.

As a kind of flue dust spray device, cylinder mounted at two ends of a fixed rod, one end of the fixing rod is connected with the central position of the rotating shaft, the other end of the output shaft of a rotating shaft and the motor is connected, the inner wall of the motor with the desulfurization device is fixedly connected with the inner wall, and the other end of the desulfurization unit another root of the rotation of the shaft connection.

Through the multilayer filtration, the dedusting efficiency can be effectively improved; at the same time, the catalyst can fully contact the ammonia water and sulfur dioxide through the cylinder, and the catalytic efficiency is improved, thereby improving the desulfurization efficiency. The utility model through the pump exhaust gas in the flue dust is pumped into the device, the first control valve to control the gas flow rate so as to ensure the processing efficiency of exhaust gas, to avoid excessive waste gas enters, influence the processing efficiency of exhaust gas; waste gas in the first suction fan driven sequentially through the first filter net, second the dust filter and third dust filter, dust filter, because the first second dust filters and third dust filter mesh diameter decreasing, therefore the first dust filter, second dust filters and third dust filters can successively intercept impurity particles of different sizes, effectively ensure the efficiency of dust exhaust; after removal through the first suction fan and second into the desulfurization device for connecting pipe, gas suction fan in second moving up At the same time, the cylinder wall ammonia nozzle ammonia through the through holes on a cylinder into the cylinder, when the exhaust gas through the through hole through the inner cylinder can have the catalyst and ammonia water mixture full contact so as to improve the reaction efficiency of ammonia and sulfur dioxide, so as to improve the efficiency of desulfurization, flue gas desulfurization treatment through second strong suction the fan and the exhaust pipe; and ammonia react with SO2 can generate ammonium, ammonium recovery after purification can be used as two times using fertilizer, effectively saving energy; because the ammonia nozzle spewing ammonia desulfurization reaction liquid in the device the accumulation level increased, when the liquid level is higher than that of the second connecting pipe, the reaction

liquid will flow into the second connecting pipe affect the normal operation, therefore second sewage pump control valve and the first time open, so the reaction liquid desulfurization device is pumped into the ammonium salt deposit The storage device stores and waits for the purification of the ammonium salt later.

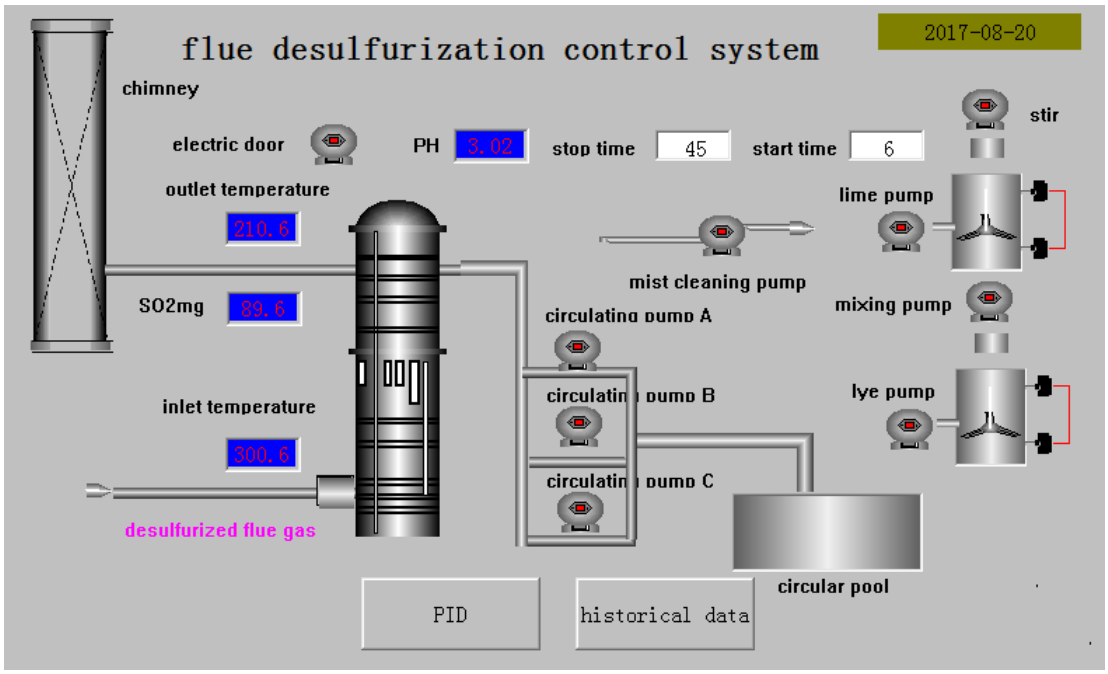

Fig.2 monitoring interface

Operation effect

(1) the process flow chart shows the technological process of the desulfurization equipment, and provides a vivid process interface for the technicians to monitor the running state and control of the production equipment.

(2) the real time curve and historical curve of process data, through the curve, can check the past and present of the amount of process data, and bring great convenience to the management of production process.

(3) set up a powerful alarm function, real-time processing is powerful, covering all the input and output points of the desulfurization equipment. Since it was put into production, technicians have recorded more than 2000 digital alarm and 300 analog alarm, which greatly shorten the time of troubleshooting and facilitate the resumption of production in a short period of time.

Conclusion

The equipment has been running for over a year, running stably and low failure rate. Once the fault occurs, the time of troubleshooting is short, which greatly shortens the equipment recovery time and improves the operation efficiency of the enterprise.

Acknowledgement

This research was financially supported by Colleges and universities in shandong province department of education scientific research and development projects.

Project name: research and implementation of automatic control system for flue gas desulfurization with item number: J17KB132.

Reference

[1] Li Renchong. Forming a one-time exhaust airway Chinese die: China, 201020183972.6[P]. 2010-05-07.

[2] Peng Yan, Wang Hai, Ding Yuanli, et al. Development and current situation of residential flue in China [J]. Science and technology world, 2013 (21): 77.

[3] Xie Youbao, Xiong Xiaoming, Yuan Gang, et al. Study on automatic production technology of integral shaping kitchen and sanitary exhaust duct [J]. Concrete and cement products, 2012 (11): 39-42.

[4] Xie Youbao, Yuan Gang, Xiong Xiaoming. Mould design for producing a new integral forming exhaust channel [J]. Mechanical engineers, 2012 (8): 88-89.

[5] Du Wenjun. Equipment design of shock forming cement flue gas production line [D]. Wuhan: School of mechanical and electrical engineering, Wuhan University of Technology, 2014.