ATLANTIS PRESS
Advances in Social Science, Education and Humanities Research (ASSEHR), volume 182
2018 2nd International Conference on Education, Economics and Management Research (ICEEMR 2018)

The Application of Heuristic Teaching in the Circuit Theory of "Excellent Engineer Class"

Yumin Ge
School of Electrical and Electronic Engineering
North China Electric Power University
Baoding, China

Mengyuan He
State Grid Hebei Procurement Branch
State Grid
Shijiazhuang, China
priangelina@163.com

Xin Liu
School of Electrical and Electronic Engineering
North China Electric Power University
Baoding, China

Huijuan Ran
School of Electrical and Electronic Engineering
North China Electric Power University
Baoding, China

Tao Wang
School of Electrical and Electronic Engineering
North China Electric Power University
Baoding, China

Xiao Yan*
School of Electrical and Electronic Engineering
North China Electric Power University
Baoding, China
yanxiao_2013@126.com

***Abstract*—The "Excellent Engineer Class" aims to cultivate outstanding engineering talents for the world. The course of "Circuit Theory" is one of the most important courses in "Excellent Engineer Class". In practice of the course, the use of Heuristic Teaching can guide students to active thinking. Students' subjective initiative can be improved, and the method of solving certain kinds of problems can be mastered by Heuristic Teaching. In addition, this method can be actively used by students to guide future studies. Directly involved in exploring teaching for students in the process of teaching, Heuristic Teaching can develop the innovation ability of students. The ability to master the scientific methods of students can be cultivated, which is also the purpose of establishing "Excellent Engineer Class". Heuristic Teaching fits perfectly with it and should be vigorously advocated and implemented in teaching practice.**

Keywords—heuristic teaching; Excellent Engineer Class; circuit theory; innovation ability

I. INTRODUCTION

"Excellent Engineer Training Program" was launched by the Ministry of Education of the People's Republic of China in June 2010, aiming to train outstanding engineers for the future field. The plan requires universities to change the concept of running schools, reform the training mode of talent students, and cultivate outstanding engineering talents in order to face the world. As an important export college for electrical engineers, North China Electric Power University has also selected outstanding students from the electric majors. Consequently, the "Excellent Engineer Class" is formed.

"Circuit Theory" course [1-5] is an important technical basic course for the electronic and electrical information majors in colleges and universities. It is the first engineering course encountered by students when they enter the university. It has certain engineering practicality, and it is also the bridge to learn follow-up specialized courses. As one of the most important courses in "Excellent Engineer Class", the course teaching of the Circuit Theory fitting for "Excellent Engineer Class" is established to help the cultivation of outstanding engineering talents. Therefore, in the teaching process, emphasis is placed on the heuristic teaching practice of the students in "Excellent Engineer Class".

II. HEURISTIC TEACHING [6-7]

Heuristic Teaching refers to a teaching method of leading students to grasp the knowledge initiatively, actively and conscientiously by using a variety of ways. According to the teaching task and the objective law of learning, teachers inspire students' thinking. The idea of "guidance without teaching, strictness without depression, enlightenment without telling the result" should be advocated in teaching process. In the course of teaching, the "question and answer" ("Q&A") method should be mainly used to inspire students' independent thinking to explore the truth.

Heuristic Teaching is not only a method of teaching, but also a teaching thought, teaching principles and teaching concept. Its essence lies in correctly dealing with the relationship between teaching and learning, which reflects the

This paper is subsidized by research and practice of higher education teaching reform project in Hebei province(research and practice of hybrid teaching in circuit course centered on the improvement of students' ability, 2017GJJG211), North China Electric Power University (Baoding) common course quality improvement project, and North China Electric Power University (Baoding) excellent young teacher teaching support scheme.

objective laws of teaching. With the progress of modern science and technology and the accumulation of teaching experience, Heuristic Teaching has been constantly enriched and developed. At present, many of the innovations and ideas of teaching reform in many countries are related to the requirements of Heuristic Teaching.

Heuristic teaching is a method of absorbing new knowledge based on the old knowledge which already exists in consciousness. It can be divided into five stages which include preparation, prompt, comparison, summarization and application. In "preparation" stage, teachers ask questions and students answer with the help of the old knowledge. In "prompt" stage, "Q&A" is used by teachers to guide students to solve new problems by using old knowledge. In "comparison" stage, teachers should focus on the similarities of old and new knowledge and inspire students to establish the relationship between old and new knowledge. The "summarization" stage consists of students' recognizing the similarities of the two kinds of knowledge and initializing the method to solve such problems. In the "application" stage, students can solve new problems independently according to the conclusion of the previous stage. And it can be realized that the conclusion can be applied to similar problems.

III. Examples of Heuristic Teaching

The following is an example of the teaching process of heuristic teaching with "steady analysis of non-sinusoidal periodic signal circuit".

A. Preparation stage

Students already have the basis of the circuit analysis method of the frequency domain, which is the phase method of single frequency. Teachers can simply review the steps of the phase method and enhance students' familiarity with the old knowledge.

B. Prompt stage

Teachers should lead students to think about the following questions. Because of the presence of nonlinear loads in the power system, there often has a large number of harmonics. In electronic circuits, the square wave signal and triangular wave signal are usually selected as the signal source. Therefore, the actual voltage waveform of the actual power supply system is not completely the sinusoidal waveform with single frequency. How to analyze the steady-state response of non-sine-periodic signals? When calculate the current i in the RLC series circuit, as is shown in Fig. 1, it can be analyzed with the "phase method" while u_S is the sine voltage. Otherwise, the reactance and capacitive reactance in the circuit will present different values with different frequencies. Now, how to analyze the steady-state response of the circuit? Can "phase method" be used directly?

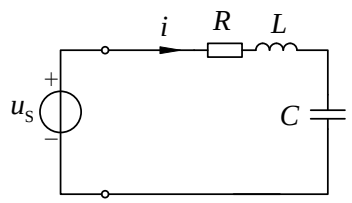

Fig. 1. RLC series circuit

C. Comparison stage

In this stage, students are led by teachers to "recall" things. Can non-sinusoidal signals be divided into a superposition of DC and sinusoidal signals? What mathematical tool can be used? The Fourier series expansion of the non-sinusoidal periodic signal can be independently related by students:

$$\begin{aligned} u_S(t) &= U_0 + u_1 + u_2 + u_3 + \cdots u_k + \cdots \\ &= U_0 + \sum_{k=1}^{\infty} U_{k\mathrm{m}} \sin(k\omega t + \theta_k) \end{aligned} \tag{1}$$

According to equation (1), can the u_S in Fig. 1 be decomposed into a series of voltage sources? Fig. 1 can be equivalent to the form as Fig. 2 when u_S contains DC component, the base wave component, the second harmonic component and the third harmonic component.

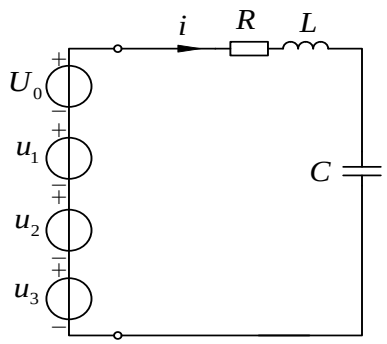

Fig. 2. Series of voltage sources

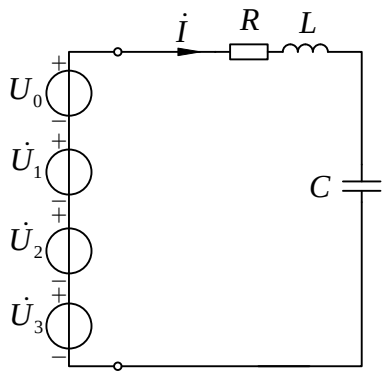

Fig. 3. Phase model of Fig. 2

Then, can the power in Fig. 2 be directly turned into the phase model as is shown in Fig. 3? Students should be guided to consider that the circuit of Fig.2 cannot be directly converted to Fig. 3 because the reactance and capacitive reactance are changed with frequency.

D. Summarization stage

In this stage, teachers and students continue to study the circuit of Fig. 2. Teachers guide students to recall the response produced by the multiple independent sources in a linear circuit. It can be solved by Superposition Theorem. Students can consequently realize that the circuit becomes single frequency while each independent source is working alone. And the phase method can be used directly in DC and single-frequency AC circuits. The superposition process is shown in Fig. 4 (a) - (d).

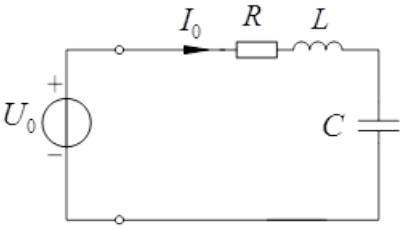

(a) DC component working alone

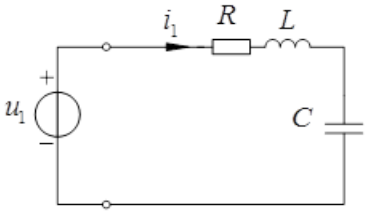

(b) Fundamental component working alone

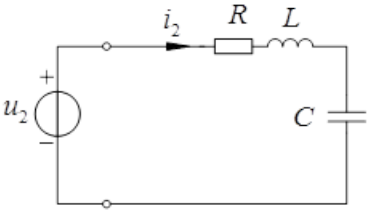

(c) The second-harmonic component working alone

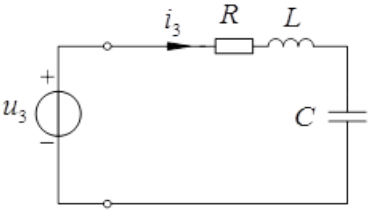

(d) The third-harmonic component working alone

Fig. 4. The linear superposition decomposition of non-sinusoidal periodic circuits

Fig. 4(a) is a DC stable circuit. In Fig. 4 (a), inductance is equivalent to short circuit, and capacitance is equivalent to open circuit. DC component I_0 can be obtained by related knowledge of DC circuit. All of Fig. 4 (b) - (d) are sinusoidal stable circuits. The phase models can be respectively obtained, which are shown as Fig.5 (a) - (c). $\dot{I}_1$, $\dot{I}_2$ and $\dot{I}_3$ can be derived by using the phase method.

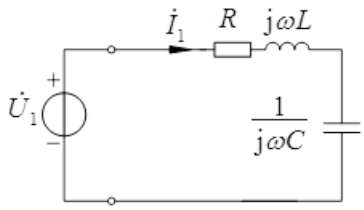

(a) Phase model of fundamental component

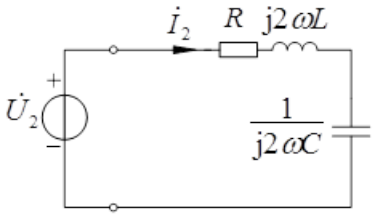

(b) Phase model of the second-harmonic component

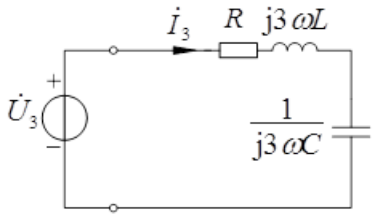

(c) Phase model of third-harmonic component

Fig. 5. Phase models of Fig.4 (b)-(d)

Then, teachers continue to ask that whether the "phase" forms can be directly superimposed. Is the equation of $\dot{I} = I_0 + \dot{I}_1 + \dot{I}_2 + \dot{I}_3$ true? Students should be guided to consider that the phase method will not reflect the concept of frequency while it is applied. Actually, the frequency of each component is different. Therefore, it cannot be superimposed directly. The time domain forms $i_1(t)$, $i_2(t)$ and $i_3(t)$ must be obtained first, then the superposition result $i = I_0 + i_1(t) + i_2(t) + i_3(t)$ is correct.

E. Application stage

According to the previous teaching process, the steady-state analysis procedure of the non-sinusoidal periodic signal circuit should be independently concluded by teachers' guidance. And according to the example given by teachers, the students can gradually solve the problem under the guidance of the solving steps. The teaching process of this part of knowledge is completed.

IV. Conclusion

The most important problem in modern teaching is to form a correct teaching guiding ideology. Only when the guiding ideology is correct, can we use teaching methods flexibly to innovate. "Student-centered, teacher-oriented" is the guiding ideology of modern teaching. How to embody this ideology depends on whether the students have the enthusiasm for learning, which has a close relationship with the leading role of the teachers. Therefore, it is necessary to carry out Heuristic Teaching to improve the students' enthusiasm for learning so as to improve their abilities in all directions.

The biggest benefit of Heuristic Teaching for students is arousing students to think actively, raising students' subjective initiative, and master the method to solve some kind of problems. And this method can be actively used by students to guide future studies, instead of the learning style of just remembering a simple conclusion. That is the purpose of education. The teaching practice proves that not only can the students memorize the above teaching process, but also they have a flexible grasp of it.

In the process of teaching, the teacher should guide students to master the methods to solve the problem step by step, let the students directly involved in the exploring teaching. Thus, the students' innovation ability can be developed, and their ability to master the scientific method can be cultivated. This is also one of the purposes of "Excellent Engineer Class". The Heuristic Teaching coincides with the "Excellent Engineer Class" exactly and perfectly. It should be promoted vigorously in the practice of teaching and practice.

References

[1] Guishu Liang, Huaying Dong. "Fundamental Theory of Circuit," China Electric Power Press. Beijing. 2009. (In Chinese)

[2] Zhifeng Zhu, Feng Zhu, Dabo Qi. "Teaching Practice on the Circuit Theory of Electrical Engineering Course," Journal of Anhui University of Technology (Social Sciences Edition). vol. 3, pp. 69-71, Mar. 2016. (In Chinese)

[3] Stefan Borik, Ivo Cap. "Arterial segment model evaluation by the means of two port electrical circuit theory—Properties of different arterial segments at various hematocrit values," IEEE. Elektro. pp. 482-488, July. 2016.

[4] Xiyou Chen, Guanlin Li, Huiwei Zhou. "Several Teaching Practices about Circuit Theory Course," Journal of Electrical & Electronic Education. vol. 2, pp. 1-4, July. 2014. (In Chinese)

[5] Bo Sun. "Exploration on the teaching of circuit theory course aiming at innovation ability training," University Education. vol. 7, pp. 11-12, July. 2017. (In Chinese)

[6] Yumin Ge. "Notice of Retraction Application of Heuristic Teaching Theory on "Circuit Theory" Course," IEEE. Wuhan, China. pp. 1-3, 18 August 2011.

[7] Shaoqing Li. "Confucius VS Socrates in "heuristic teaching theory"," XUEYUAN. London, vol. 8, pp. 40-41, Nov. 2010.