Advances in Engineering Research, volume 127
3rd International Conference on Electrical, Automation and Mechanical Engineering (EAME 2018)

Design and Implementation of Motorcycle Circuit Based on Flywheel Balance

Jiayong Yang, Huazhang Wang*, Sixue Yang, Jiang Yan and Yanqing Dai
College of Information & Electrical Engineering Southwest Minzu University, SMU, Chengdu, Sichuan, China
*Corresponding author

***Abstract*—This paper designs and implements the hardware circuit of the self-balanced motorcycle with the MK60DN512ZVLQ10 as the control core, and has the capabilities of attitude acquisition, data processing, response and man-machine interface. First building a self-balancing motorcycle overall framework, each module is independently simulated, produced and tested. Second, each module is assembled to test the overall system performance indicators. The last, the system hardware and software are jointly debugged and the modules are finally integrated. To a printed circuit board. The acquisition of the inclination angle of the motorcycle and the rotation speed of the flywheel, the control of the motor and the steering gear, and the necessary man-machine interface are realized. The circuit tested by the practice has strong anti-interference ability and good stability. And the system integration is high and the economy is good. It is an ideal test platform for controlling researchers.**

Keywords—MK60DN512ZVLQ10; self-balancing motorcycle; circuit design implementation

I. INTRODUCTION

With the development of science and technology, all industries are evolving towards an intelligent and automated route. In recent years, with the vigorous development of Internet finance and the improvement of people's living standards, the demand for the logistics industry has continuously increased, and people's demands for quality of daily life have increased. The traditional logistics industry is purely based on manpower distribution. The two-wheeled vehicle is an ideal tool for autonomous delivery of goods. Designing a self-balancing motorcycle self-balancing system has extremely high social value. At the same time, such vehicles can be of great help to beginners and motorcycles. Domestic and foreign research on the two rounds of self-balancing system before and after the start of the domestic, but still very few products are available. Sharp[1,2] studied motorcycles in detail from the aspects of dynamics, control and stability. In October 2006, IEEE Control System Magazine made a special discussion on Advance in Motorcyele Design and control [3], discussing the development and application of motorcycle control systems. On the product side, Jyrobike brand bicycles[4] can achieve balance through gyro effects and apply for patents and put into operation in the market. Jingang Yi and others developed an autonomous driving platform for motorcycles[5] to maintain the system's balance by controlling the centrifugal force of the fork's corner. In China, Wang Lubin proposed modelling and control of unmanned bicycles in master's thesis. This paper designs and implements the hardware circuit of front and rear two-wheeled self-balanced control system based on flywheel control.

II. HARDWARE SYSTEM DESIGN

As an automatic control system, motorcycle self-balancing must have the ability to sense its own posture and respond. In order to realize a series of actions from acquisition to response, the system has three main parts: the detection part, the control part, and the execution part. In order to ensure the normal and stable operation of the system and to facilitate debugging, it should also have a power supply module, a button module, and a display module.

As shown in Figure I, the lateral tilt angle of the system is detected using a gyro; the Omron encoder detects the angle, angular velocity and angular acceleration of the flywheel rotation. The collected information is transmitted to the MCU for analysis and processing. Control the motor drive circuit to drive the flywheel rotation to maintain system balance and travel; control the steering gear to achieve changes to the direction of travel. At the same time, the system information is displayed on the OLED screen and communicated with the host computer through ZigBee; the system parameters, operation modes, and the like can be debugged through a button, an upper computer, a dial switch, and the like.

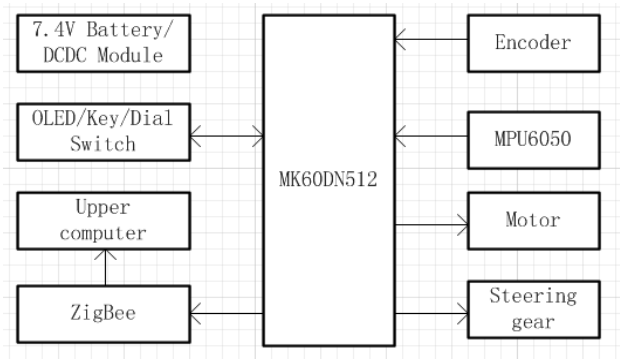

FIGURE I. CIRCUIT OVERALL FRAME

A. Control Section

1) The template is master control circuit design

The self-balanced motorcycle system designed in this paper has high real-time performance and large amount of data processing. It needs to collect sensor information efficiently

and control the actuator to respond. It communicates with OLED, ZigBee and other peripheral devices, and reduces the system's volume and quality. The gyroscope that collects the inclination transmits the data to the controller through the IIC bus protocol; the pulse signal returned by the Occitan encoder that collects the rotation speed is orthogonally decoded; then the data is analyzed; the output speed, direction and servo of the PWM on the motor are output. The direction is controlled; the relevant information is transmitted to the OLED screen display through the SPI protocol; and the UART protocol is required to communicate with the upper computer through the ZigBee module. As shown in Figure II.

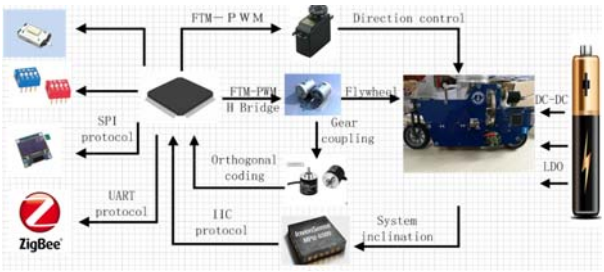

FIGURE II. ELECTRONIC COMPONENT SELECTION AND IMPLEMENTATION

2) Master control circuit implementation

This article selects NXP's 32-bit microprocessor, the MK60DN512ZVLQ10, which has a wealth of resources. Cortex-M4 core, 100MHz frequency, 512KB flash memory, 128KB RAM, built-in IIC, SPI, UART, FTM, LPTMR module. The FTM module supports quadrature decoding and PWM output.

The MCU uses the LQFP-144PIN package and integrates a clock circuit, a reset circuit, and a JTAG download circuit on the board. In order to streamline the layout of the circuit board and improve the system stability, only the required I2C interface, UART interface, SPI interface, and some common IO ports will be exported. The specific IO resources are allocated as follows:

Gyro (I2 C): PTC10, PTC11;

Electric Machine (FTM): PTD4, PTD5, PTD6, PTD7;

Rudder (FTM): PTB18;

Encoder (FTM): PTB0, PTB1, PTC5

Serial port (UART): PTC14, PTC15;

OLED (SPI): PTB21, PTB22, PTA29, PTA28, PTA27;

Press key: PTA110, PTA11, PTA12, PTA13, PTA14;

Dialing: PTE5, PTE6, PTE7, PTE8.

B. Data Collection Section

1) Encoder

In order to ensure the stability of the system, the closed-loop control of the flywheel speed is achieved by collecting the rotational speed and angular acceleration of the flywheel, and the flywheel speed is transmitted to the encoder through the gear coupling with a reduction ratio of 1:1. The flywheel is collected using the Omron E6A2-CW3C encoder. speed. The encoder shaft outputs 512 pulses per revolution, and passes the orthogonal coding to transfer the speed and direction information to the MCU. In order to ensure normal operation, 5V voltage is used to supply power. During the test, it was found that the single-chip microcomputer could not acquire the encoder signal and added a pull-up resistor to enhance the signal output capability. After the compatible MCU pull-up voltage was 3.3V, the signal was successfully collected.

2) Gyro

In order to realize the precise control of the system attitude, this paper selects the attitude information of the MPU6050 six-axis gyroscope accelerometer sensor acquisition system—the lateral inclination. The sensor uses a 5V supply and communicates with the microprocessor through the IIC protocol. Compared with software implementation, the processor-supported hardware IIC makes the system more efficient, more stable, and less difficult to implement.

C. Implementation

1) Motor drive

In order to achieve microprocessor control of the flywheel, the motor drive circuit is required to drive the motor to rotate. Commonly used motor drive circuits generally choose integrated motor drive chips or use discrete components. Although the integrated circuit is simple, the current is relatively small. The system motor designed in this paper is frequently switched frequently and has a large current. Therefore, discrete components are used to build the motor drive circuit.

The motor drive module is divided into two parts: the power circuit and the drive circuit. The power circuit is a cloud-like energy path of the motor. When the system is in operation, the speed of the motor changes greatly, and the positive and negative reversal frequently occurs. The H-bridge circuit is a typical motor drive circuit, which can meet the requirements well. However, if the control signal is faulty, it is easy to make the same bridge arm conduct and short circuit, and then a switch drive circuit with dead-zone protection is designed. This article selects LR7843 type MOS as the bridge arm switch tube, VDS can reach as high as 30V, when the depth turns on, the electric current can exceed 100A, the on-resistance is small, totally accord with the system requirement. In order to ensure that the MOS operates in the switching state, the turn-on and turn-off time is short, and the switching loss is small. The Hip4082 integrated MOS driver chip is selected. The chip has a simple peripheral circuit, convenient control, and dead-time control and logic conversion. The MC34063 power management chip, which has fewer external components and high conversion efficiency, raises the voltage to 12V as the VGS voltage. And designed the buffer protection circuit and the return channel of martial arts. As shown in Figure III.

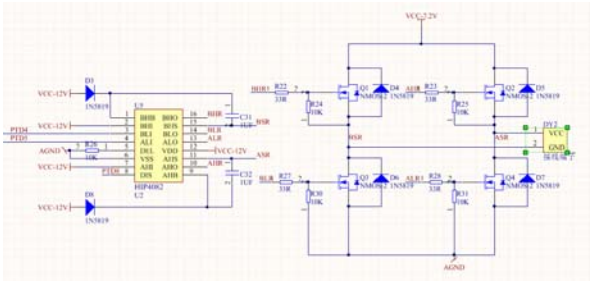

FIGURE III. MOTOR DRIVE CIRCUIT

2) Servo

This article selects the S3010 servo as the driving force of the front fork. The servo interface circuit includes the power circuit and the PWM interface. In order to ensure the servo output torque and response speed, the power supply voltage is set to 6V. The current is only 15mA when stopped under the 6V power supply condition, the current is about 200mA when the load is working, and the current will exceed 1A when the motor is stalled. When the battery power is low, the voltage is only about 7V. The LM2941 integrated voltage regulator chip is used to supply power to the servo. The typical voltage drop of the LM2941 is only 0.5V, which ensures the normal operation of the servo even when the power is low. It also has short-circuit protection, thermal overload protection and self-protection. When the battery is reversed or the voltage between the batteries is changed, the protection circuit inside the chip protects the LM2941 and its regulating circuit.

D. Auxiliary Module

1) Man-machine interaction

To facilitate debugging and simplify operation, a simple human-computer interaction interface was designed, including LED indicators, buttons, dial switches, OLED screens, and serial communication interfaces. Through the dial switch, the working mode of the system can be switched, the system parameters can be adjusted by pressing a button, the working status of the system can be indicated by the LED, and the system parameters can be displayed through the OLED screen. The OLED screen uses the SPI protocol to communicate with the microcontroller. In addition to the SPI pins, there are 3 common IO ports to control the screen working status. Use UART protocol to communicate with ZigBee module and PC host computer.

2) Power management

The power module is an essential part of the system, and the stability of the power supply plays a crucial role in the normal operation of the system. The overall system uses the 7.4V LiPo model battery to provide power. Compared with other batteries on the market, these batteries are lighter in weight and smaller in size, which reduces the system quality and reduces the system's center of gravity. The minimum system, button, and dial switch use the TPS7333 output 3.3V voltage supply, encoder, OLED, ZigBee use TPS7350 output 5V voltage supply. TPS series of these two power management chips using less external components, is ultra-low noise, power supply voltage suppression ratio of high linear regulator chip, and has over-voltage, over-current, reverse connection protection. The motor drive uses battery power directly. In order to reduce the impact of the motor-driven high current on the control circuit, the control circuit is placed on both ends of the circuit board, and a large area of copper is applied to the control part, and a single point grounding treatment is performed using a 0 ohm resistor.

III. STYLING SYSTEM DEBUGGING AND ANALYSIS

A. Electrical Test

This article has carried on the electrical test, the program joint debugging to the real thing, the test platform is as follows:

Battery Power: Format 2S-1300mA-LiPo battery, output voltage 7.4V;

Oscilloscope: Germany Hui Mei HM01024 oscilloscope, 100MHz bandwidth, 1M ohm input impedance;

Commissioning Software: IAR 7.4

Multimeter: FLUKE 15B+ Digital Multimeter

1) Power supply test

The power management chip output pin voltage was tested, and the output voltage rms and peak-to-peak values are shown in Table I.

TABLE I. POWER MANAGEMENT CHIP OUTPUT

	The motor is not working		**the motor is working**	
	Valid Values /V	Peak-to-Peak /mV	Valid Values /V	Peak-to-Peak /mV
TPS7333	3.30	60	3.26	180
TPS7350	5.02	80	5.04	180
LM2941	—	—	6.10	310
MC34063	—	—	12.4	260

After testing, the power supply of the control system still maintains a low power supply ripple even when the motor is frequently adjusted for positive and negative reversals, which can ensure the normal operation of the system. The LM2941, which supplies power to the servos, was originally isolated from the motor. The supply voltage was extremely glitched, peaking at 1.8V. Although improved, it is still a common switch with the motor drive circuit but the peak-to-peak value is only 310mV. Although the boost circuit of the motor drive circuit uses a switching power supply chip, it also maintains a good voltage output. Makes the MOS tube quickly in a deep conduction state.

2) Minimum system test

The minimum system is the core of a control system. After actual testing, the crystal oscillator circuit, reset circuit, and download circuit can all work normally, and they maintain good performance during operation.

3) Others

Using a multimeter to perform preliminary connection tests on the remaining modules (OLED, gyroscope, etc.), the electrical connection of each module is normal, the supply voltage is normal, the ground potential noise during operation of the motor has no significant changes, no glitches are

coupled to the control circuit, and the system design requirements are fully met.

B. System Program Debugging and Operation

Define abbreviations and acronyms the first time they are used in the text, A complete system software and hardware are indispensable. This paper designs and implements a hardware platform. In order to make the system work properly, the corresponding software platform is designed and debugged. The software is also divided into four steps: data acquisition, data processing, and control output. Combined with the relevant module data transmission protocol, the lateral balance control of a self-balanced motorcycle is realized. Software ideas shown in Figure IV.

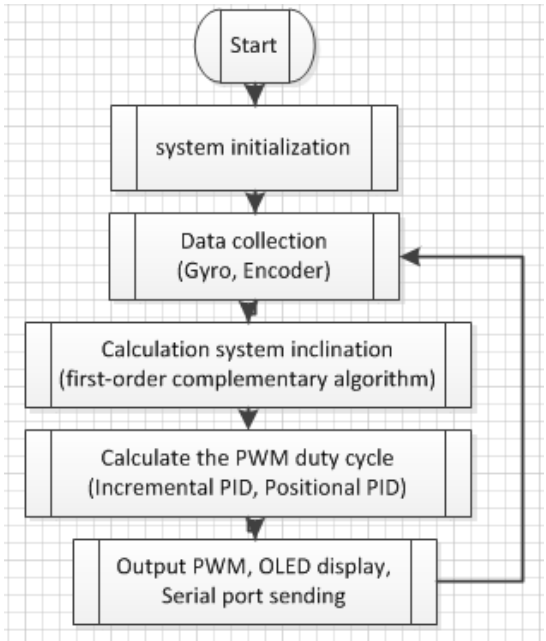

FIGURE IV. PROGRAM IDEAS FRAMEWORK

1) Module test

After the actual measurement, the microprocessor can collect the tilt angle returned by the gyroscope, and can perform orthogonal decoding on the pulse returned by the encoder. The information collected by the above sensor is displayed on the OLED, and can be sent back to the upper computer through the ZigBee module. The system parameters can be changed by pressing keys and dialing switches, and can be monitored in real time in the Debug mode.

2) Motor drive circuit testing

In the Debug mode, the relationship between the PWM duty cycle and the motor speed in multiple sets of stable states is collected and shown in Table 2. It can be seen from the table that the linear relationship between the motor speed and the PWM in steady state with the load is in line with the open loop transfer function of the system DC motor. However, in the open-loop state, the steady-state rate is large, and when the closed-loop control is used, the rotational speed control can be better.

TABLE II. OPEN LOOP DUTY CYCLE - SPEED CORRESPONDENCE TABLE UNAVOIDABLE

Duty(%)	2	3	5	10	15	20	25
Speed(r/s)	0.00	5.60	13.2	33.2	53.0	71.2	91.4

After the test and analysis of the operating results, the design of the hardware system can achieve the basic functions of the design, and in some extreme cases can maintain better operating characteristics. After practice, we can know that the design can be used as a two-wheeled self-balanced system. The hardware implementation platform, through the optimization of the later algorithm, can guarantee better running results.

IV. HARDWARE SYSTEM DESIGN

This article has completed the hardware circuit design of the front and rear two rounds of self-balanced systems, and completed the hardware circuit design of the control system with MK60DN512ZVLQ10 as the core. Including the minimum system module, power management module, sensor module, motor drive, human-computer interaction interface, serial communication circuit. A PCB board was fabricated and tested through electrical tests and software to verify that the circuit has strong anti-jamming capability and good robustness. But the control of the system's motion trajectory depends on the fixed path given by man, and more sensors can be added in the later research, In particular, the identification of the surrounding environment and the realization of full-automatic operation of the system play a greater role in practice. On the other hand, the systems designed in this paper are all integrated on the same PCB. If a certain part has problems, it needs to be completely disassembled. In the subsequent study, each module can be separated to facilitate system debugging.

ACKNOWLEDGMENTS

This study was supported by National College Students Innovation and Entrepreneurship Project of China (Project No: S201710656006), Sichuan. The authors would also like to thank the Southwest University for Nationalities, for their expert help.

REFERENCES

[1] R.S.Sharp and D.J.N.Limebee. A motorcycle model for stability and control analysis. Mulitibody System Dynamics,vol.6,no.2,PP.123-142,2001.

[2] R.S.SharpandD.J.N.Limebeer.Advaneesinthemodelingofmotoreyele.Multi-body System Dynamics, vol. 12, no.3,PP.251-283,2004.

[3] Advances in motorcycle design and control. IEEE Control systems, Magazine vol.26, no. 5, 2006.

[4] Improvements in or relating to Means for the Balancing and Con-trolling of Toy Bicycles, England, GB479430A, Jan.31,1938.

[5] The blue team autonomous motorcycle. http://www.pbs.org/nova/robotrace.