Advances in Engineering Research, volume 127
3rd International Conference on Electrical, Automation and Mechanical Engineering (EAME 2018)

The Design of Smart and Multi-channel Sampling Circuits with Pre-correction Function

Zheng Liu and Yuan Zhu
Suzhou Industrial Park Institute of Services Outsourcing, Jiangsu Province, China

***Abstract*—Current sampling is used in the vast majority of auto lamp test system and the testing and controlling system of other products. It can observe and record the current value in the detection process, with the purpose to judge whether the various features of the products can meet the test standard. Based on the testing demand of mass production, this design devised a smart and multi-channel sampling circuit with pre-correction function, which ensures the stability and accuracy of sampling circuit. This circuit has the characteristics of small volume and good heat dissipation, has a good automatic judgment function (upper and lower limit), and has other functions such as preserving and summarize the record of all test data.**

Keywords—pre-correction; multi-channel; current sampling

I. THE EXISTING PROBLEMS OF CURRENT CIRCUITS

In the current sampling circuit, the most common method is to use current transformer or high power sampling resistance. Especially when more channels are need, the cost of using current transformer is too high. However, the volume of high power sampling resistor is big, the calorific power (power consumption) are also relatively large with higher cost. So it is not very appropriate to adopt it in the occasions where multi-channel and large volume are required.

In this design, constantan wire is used as the current sampling resistance to provide current sampling with small volume and low cost. But in actual design, a new problem is emerging. Due to the shunt characteristics of sampling resistor, the resistance of constantan wire is generally smaller (typically between 0.001 ohms to 1 ohm), especially after welding, the resistance in the welding dish will be a short circuit. The effective lengths of the resistance will be smaller and do not match, which leads to the inaccuracy of the test results. Circuit board is thick, the hole part through which the constantan wire is metalized will be a short circuit, this paragraph of resistance will be smaller. So in the design of sampling resistance using constantan wire, the general engineer can often succeed within a single sample, but when the sampling resistance is mass produced, the result is not stable, and the current sampling values are often found to be biased. Another problem is that the current circuit of the traditional single-chip microcomputer can only real-time display the current sampling value. It is always difficult to record and manage the historical data.

II. OVERALL DESIGN

According to the demand, this design not only used constantan wire as the sampling resistance, but also uses pre-correction circuit and NI data acquisition card to overcome the above problems.

The workflow is shown in Figure I, the external current road (n road), through the interface circuit, enters ① -- layout/calibration switch control circuit, and then into ②-- the current sampling circuit, by ③-- multiple selected switch and isolating amplifying circuit, it enters ④-- data acquisition card with time sequence , finally goes to the last data access ⑤ computer. According to the need, enterprise engineers can achieve all sorts of monitoring, analyzing and recording functions, among which multi-channel switch and input channel selection and control are output by ⑤ computer through ④ data acquisition card.

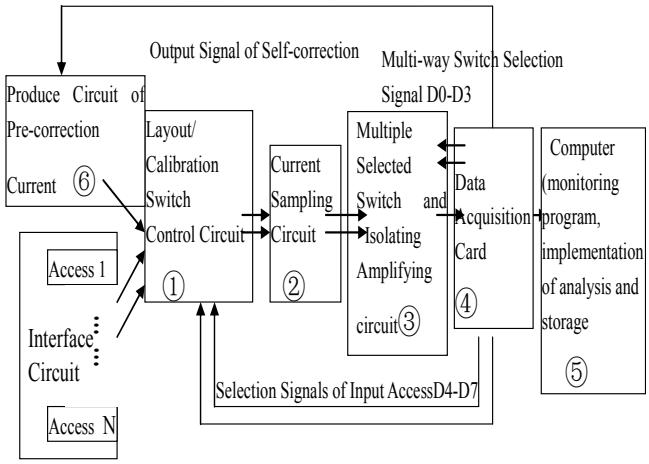

FIGURE I. SYSTEM FRAMEWORK

III. TECHNICAL IMPLEMENTATION

A. The Realization of Indurstrial Current Sampling Circuit

The design part is shown in Figure II, the sampling resistor R1 using constantan wire as the raw material, C1 as filter capacitance, by AD621--amplifier instrumentation, the sampling current is differentially amplified to be the enlarged voltage signal, and the voltage signal is the subsequent input signal of multi-channel switch and isolating amplifier circuit.

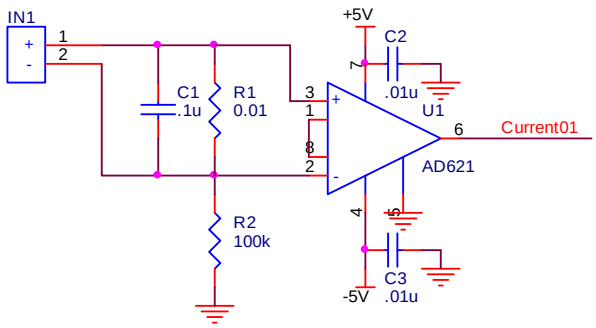

FIGURE II. CURRENT SAMPLING CIRCUIT

In order to meet the demand for more easily used instrument amplifiers, ASDI developed the single chip IC instrument amplifier-- AD621. Because the passive and active components are in the same inside tube core, they can be precisely matched. Meanwhile, these devices keep matching in the whole temperature range, thereby ensuring the good function in wide temperature range. Compared with differential amplifier, instrument amplifier is an operational amplifier subtracter with two input buffer amplifiers. Differential amplifier is essentially an op-amp subtracter, and it often uses large input resistor value. The resistor provides protection by limiting the input current of the amplifier, at the same time, the greatest characteristic of differential amplifier is that it can effectively restrain the common-mode noise.

In this design, the pins 1 and 8 of AD621 are short-wired, and the precise gain is set to 100, so the input voltage is calculated as shown in equation (1):

$$U = R_1 * I * G = 0.01 * I * 100 = I(V) \qquad (1)$$

If the input current is 2.5A, then the output signal of AD621 is 2.5V.

B. *The Implementation of Pre-correction Circuit*

The generating circuit of pre-correction current is shown in Figure III, the input signal is an analog signal provided by the data acquisition card (10-10 V ~ V), the correction current can be defined by the user according to the size of the current, followed by TL072 op-amp, the signal is output. After isolating op-amp ISO122, the signal is output to the op-amp AD711. The output of AD711 is implemented through p-channel FET tube-- BS250, the pre-correction current signal is output to the layout/calibration switch control circuit.

According to the characteristics of operational amplifier, we can calculate the size of the pre-corrected current according to formula (2):

$$I = \frac{15 - V_i}{R24 // R25} \qquad (2)$$

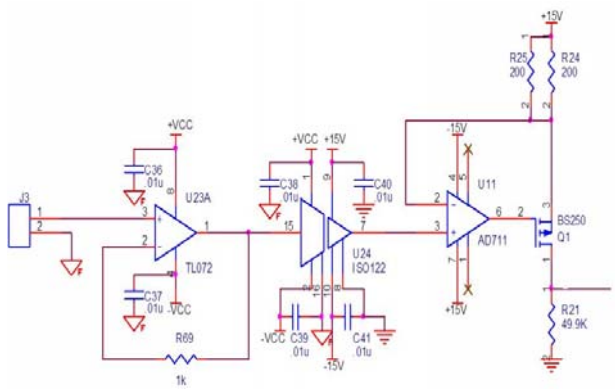

FIGURE III. PRODUCE CIRCUIT OF PRE-CORRECTION CURRENT

V_i is the enhanced analog signal of the data acquisition card. By following voltage and isolating the operational amplifier, the input of AD711 is still in the same range. R24 and R25 can be used as the regulating resistors, and coordinate the changes with V_i when it is necessary to change the pre-correction current so as to achieve a wider range of variation values.

C. *The Implementation of Multi-channel Circuit*

The function of multimodal circuits is to switch multi-road input signal through 16 road--DG406, and convert it to 1road output signal. Through the op-amp output of TL072, the output is followed. After isolating op-amp ISO122, the signal is output to the data acquisition card.

The multi-channel switching signal is also output by data acquisition card -- digital IO port. TLP621-4 is isolated by optical coupling. The optical coupler transmits electrical signals by means of light. It has good isolation effect on input and output electrical signals, so it is widely used in various circuits. Because the input and output of the optical coupler are separated from each other, the electrical signal transmission is unidirectional, which ensures that it has good electrical insulation ability and anti-interference ability. Because the input terminal of the optical coupler belongs to one of the low resistance elements in the current mode, it has a strong inhibition ability in a common mode. Therefore, as an interface device for signal isolation in digital communication and real-time control, the reliability of the circuit can be greatly enhanced. In this design, a one-way transmission of signals is realized, the output signal can not influence the input terminal, the control signal and the current signal of sampling under test completely realize the electrical isolation, possessing strong anti-interference ability and stability in work.

Since the input impedance of the isolated op amp ISO122 is small, we added a TL072 amp between the output of DG406 and the input of ISO122 to follow the output, with the aim of improving the input impedance of ISO122.

Because of the adoption of digital modulation, the performance of the isolation gate will not affect the integrity of the analog signal, so it has high reliability and good frequency. And isolation amplifier shall be used in high

common-mode voltage for measuring the small signal, and the object to be measured and the data acquisition system shall be isolated so as to improve the rejection ratio of common mode while protecting the electronic equipment and personal safety.

IV. CONCLUSION

The sampling resistance of constantan wire may not be accurate after being welded, so through specific calibration comparison in advance, the actual correction of specific sampling resistor can be gained. In every back operation and amplifying circuit, the after-correction of value is used, so accurate current sampling value can be gained. According to the needs of users, this function is corrected after switch. Another correction is generally needed when the circuit components (or environment) change or when the time is longer than the ordinary time. The circuit has testing capabilities, and conform to the industrial application.

This circuit has the function of pre-correction, which can effectively overcome the error of circuit components. The circuit adopts constantan wire as the sampling resistor, which overcome the faults such as high cost and large volumes caused by current transformer or power sampling resistance. And because of the adoption of data acquisition card and data acquisition and control functions of LABVIEW, it is very effective to monitor and manage. In the design, the adoption of isolation technology and instrumentation amplifier is considered in every detail, so it has good anti-interference ability, which is very suitable for the use of industrial sites.

ACKNOWLEDGMENT

This research was financially supported by the Advanced Training for Professional Major Leaders of Higher Vocational Colleges in Jiangsu Province (2017GRFX039), Cyan Engineering in Jiangsu Province, and 3rd Education Reform Project of Vocational Colleges in Jiangsu Province (ZYB276).

REFERENCES

[1] Ying Huang, Zheng Liu. Application Technology of Single-chip Engineering [M] Fudan University Press, 2014.

[2] Zaimin Zhong, Zhenting Chen. The application of Δ-Σ ADC in Variable Decoding and Current Sampling [J]. Micro & Special Motor, 2017, 45 (10)

[3] Bin Luo, Hong Zhou. A Single-resistance Current Sampling Method and its Application [J]. Power Electronics Technology, 2017 (4): 118-121

[4] Xiaobo Chen, Wenxin Huang. Single-resistance Current Sampling and Current Reconstruction Methods for Frequency Converters [J]. Electric Drive, 2010, 40 (8): 3-6

[5] Qianying Liu, Changrui Wang. Design of Multi-channel Data Acquisition System based on LabVIEW and PSoC [J]. Electronic quality 2017(1)

[6] Aibing Shen, Mingyuan Liu. MATLAB Simulation Analysis of Low-pass Filter Selection in Active Power Filter [J]. Journal of Shenyang Institute of Engineering (natural science edition), 2007,(02)