ATLANTIS PRESS

Advances in Engineering Research, volume 127

3rd International Conference on Electrical, Automation and Mechanical Engineering (EAME 2018)

Design and Test of Universal Super High Efficiency Motor

Hui Su[1], Hui Wen[2], Xinhua Zheng[2], Xueqin Tang, Xunfang Zhao[3] and Jianxin Su[4,*]

[1]Changsha Nanfang Professional College, Hunan ,China

[2]Hunan Tianneng Motor Manufacturing Co Ltd, China

[3]Hunan Institute of Applied Technology of China

[4]College of Information Engineering, Xiangtan University, Hunan, China

[*]Corresponding author

***Abstract*—Due to the different power standards around the world, to the motor and construction machinery export enterprises design and production management more difficult, raising the cost. If in accordance with international standards IE3, producing a series of ultra-efficient motors, power supply to meet world standards, while not changing the size and weight, without increasing the manufacturing cost, convenient motor export to the world, in particular by providing machinery and engineering supporting exports to the world great convenience. This article describes a frequency and voltage universal motor design method, as well as using this method to design ultra-high efficiency motor calculation data and prototype test data. Calculation data and type test data show that it is feasible that the same motor is basically invariable under the power standards of all countries in the world.**

***Keywords*—equivalent winding; super efficient motor; world general**

I. INTRODUCTION

Power supply standard all over the world to develop, the frequency and voltage values are different, along with the deepening of reform and opening up, more and more countries of China's export of electromechanical products, to undertake foreign projects more and more, will inevitably lead to mechanical and electrical products and engineering machinery supporting motor voltage / frequency standard number, increase the difficulty of export products production and management increase the prepared cost, and even cause engineering machinery and motor power supply standard does not burn. Important engineering equipment manufacturers in China will encounter a problem in the long term, there is an urgent need for a series of motor power supply can satisfy the standards of different countries, the construction machinery of the world export demand, reduce the complexity of the motor procurement, and meet the needs of international engineering machinery.

II. THE THEORETICAL BASIS OF UNIVERSAL MOTOR DESIGN IN THE WORLD

According to the basic theory of motor design formula, $U = 4.44fN\Phi$ [1] can be seen, if Φ as a constant, for different power frequency and voltage level, can be adjusted by changing the value of N, That is:$\Phi = U/4.44fN$ = constant,

Table I is a summary table of power frequency and voltage levels in all countries of the world

According to the international power supply standard, China's major exporters of construction machinery will summarize the power standards of various countries around the world into commonly used voltage/frequency standards as shown in Table II:

TABLE I. THREE-PHASE POWER STANDARDS OF ALL COUNTRIES

V(v)	F(Hz)	Use the country
200	50/60	Hong Kong(50),Korea(60)
208	50/60	Barbados(50),Bahamas,Canada
220,230,240	50/60	Multi Country use
346	50	Hong Kong
380,400,415	50/60	Multi Country use
440	50	Multi Country use
460	60	Multi Country use
480	50/60	Portugal (50),U.S.A(60)
600	60	Canada

TABLE II. VOLTAGE/FREQUENCY STANDARDS COMMONLY USED IN VARIOUS COUNTRIES OF THE WORLD

F(Hz)	50 Hz			60 Hz		
V(v)	380V	400V	415V	380V	400V	415V
	440	460		440	460	480

According to the power standards of all countries in the world, the allowable voltage fluctuation range is ±5%. Therefore, the above table voltage can be categorized into three standard voltages, and two standard frequencies are designed as shown in Table III.

TABLE III. VOLTAGE/FREQUENCY DESIGN STANDARDS COMMONLY USED IN VARIOUS COUNTRIES OF THE WORLD

F(Hz)	50 Hz			60 Hz		
V(v)	380V	420V	460V	380V	420V	460V

Theoretically, as long as five taps are taken for each phase winding, it can meet the requirements of three voltage levels and two power supply frequencies. This will inevitably result in too many outlets, and the motor terminal box is too complicated. To reduce the outlet, the junction box is simplified and the outlet must be simplified.It is necessary to simplify the outlet to have the possibility of engineering

application.

III. Reduce the Outlet Method

Through the observation of the outlet box, if the number of outlet posts is reduced to 12 and a 3*4 matrix is made, it can be arranged to the existing terminal box without affecting the safety of the connection. The two frequencies need to take up two sets of terminal posts, and the remaining two sets of terminal posts can achieve three voltage levels and become the key to the design of universal motor windings in the world.

A. World General Motor Winding Arrangement Method

According to the 3*4 outgoing matrix arrangement method, the world's universal motor winding principle is shown in Figure I-Figure II. For the 50Hz power frequency, the power supply is connected from U1, V1 and W1. For the 60Hz power frequency, the power supply is connected from U2, V2 and W2. When the power supply is 380V, the X1, Y1, and Z1 are shorted and the three-phase winding is connected to Y. When the power supply voltage is 460V, X2, Y2, and Z2 are short-circuited, and the three-phase winding is connected to Y, As long as the number of turns of N1, N2, and N3 is properly selected, the requirements of two kinds of frequencies, two voltage levels can be satisfied, and one voltage level is not satisfied.

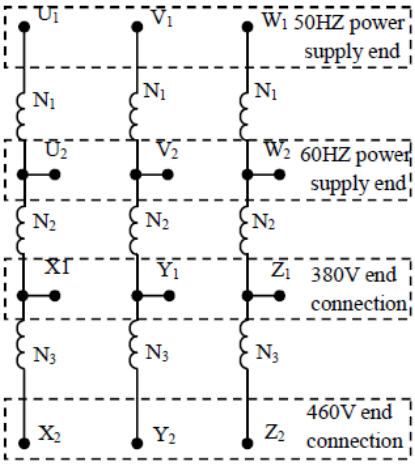

FIGURE I. WINDING OUTLET WIRING SCHEMATIC

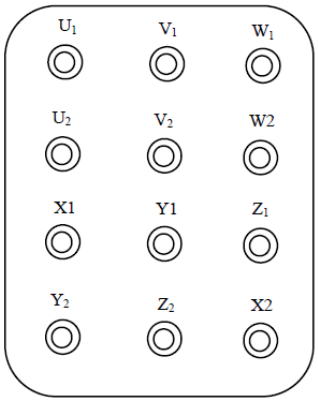

FIGURE II. POST ARRANGEMENT DIAGRAM

B. Using the Equivalent Number of Turns to Achieve the Intermediate Voltage Level

According to the relationship between the voltage and current of the Y-delta connection method, consider that the winding N3 part is connected to Δ, and the part above N2 is Y connection to form the Y/Δ hybrid connection, as shown in Figure III-Figure IV: Then, the phase current of the N3 portion is equal to $1/\sqrt{3}$ of the phase current of the N2 portion, and the phase difference is 30 degrees. The equivalent number of turns is:

$$N_3^{'} = \frac{N_3}{\sqrt{3}} COS30^0 = \frac{N_3}{\sqrt{3}} \times \frac{\sqrt{3}}{2} = \frac{1}{2} N_3 \tag{1}$$

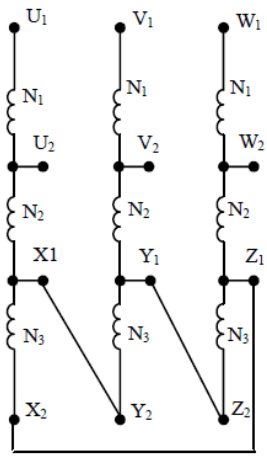

FIGURE III. WINDING OUTLET WIRING SCHEMATIC

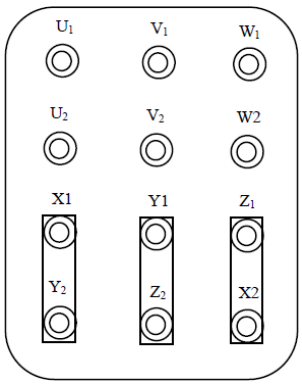

FIGURE IV. POST ARRANGEMENT DIAGRAM

That is, the triangle-connected part is equivalent to a star, which is equivalent to half of the original number of turns. The introduction of the equivalent number of turns solves the method of not increasing the terminal and achieving the intermediate voltage level, which provides a theoretical basis for the design and engineering realization of universal motors in the world.

IV. The World's General Motor Main Technical Parameters

In accordance with the above design ideas, taking the

YE3-132M-4-7.5KW motor as an example, the retrofit design was carried out and the original triangle connection was changed to a star type connection. The rest of the parameters remained unchanged, taking N1/N2/N3=3/18/4, using easiMotor v2.5 analysis and calculation, obtained the main technical parameters as shown in Table IV:

TABLE IV. YE-312M-4 7.5KW WORLD GENERAL MOTOR DESIGN DATA

V/f / parater	380V		420V		460	
	50HZ	60HZ	50HZ	60HZ	50HZ	60HZ
R (Ω)	0.579	0.495	0.541	0.55	0.639	0.605
I_O(A)	5.08	5055	4.74	4.94	4.43	4.44
P_O(w)	287.7	354.6	286	384.3	285.6	339.7
I_N(A)	14.6	14.6	13.2	13.15	12	12
P_{CU}(w)	386	317	330	285	298	260
P_{AL}(w)	230	163	223	164	218	165
P_{FE}(w)	120	183	122	182	125	181
P_M(w)	103	105	103	105	103	105
P_S(w)	75	75	75	75	75	75
η_N (%)	89.34	89.9	89.79	90.24	90.16	90.52
Cosø	0.875	0.868	0.871	0.869	0.869	0.869
I_{ST}/I_N	.6	8.7	7.95	8.79	8.34	8.86
T_{ST}/T_N	2.47	2.57	2.66	2.62	2.88	2.67
T_M/T_N	3.34	3.76	3.55	3.81	3.77	3.86
η_N=90.4% $\eta\min$=88.96% Cosø=0.84 I_{ST}/I_N=7.5 T_{ST}/T_N=2 T_M/T_N=2.3						

The GB/T28715-2012 standard is a national standard formulated by China based on the international standard IE3. According to the provisions of GB/T28715-2012, the main technical parameter guaranteed value of the YE3-132M2-4-7.5KW motor is considered as the tolerance: effectiveness $\eta \geq 88.96\%$, Power factor: $\cos\phi \geq 0.8133$, Starting torque multiple: $T_{st}/T_N \geq 1.7$,The maximum torque multiple: $T_M/T_N \geq 2.07$,Starting current and rated current ratio: $I_{st}/I_N \leq 9$ From the above calculation results, we can see that the world's universal motors are in full compliance with national standards within the required frequency and voltage range, and are a truly ultra-high efficiency motor.

V. Test Results

According to the theoretical calculation results, two prototypes were produced. The type test data are shown in Table V. The data in Table V shows that at the selected three voltage levels and two frequencies, the technical indicators meet the YE3 standard and are calculated The value error is small. In order to verify the technical performance under the remaining voltage working conditions, the most unfavorable voltage conditions have also been measured. The measurement results are shown in Table VI.From the data in Table VI, we can see that in the most unfavorable case, the technical parameters of the motor still meet the requirements of GB/T28715-2012 standard. Therefore, the motor is in the range of 360-483V at 50HZ, 60Hz, and the technical parameters are all qualified. Fully explain the correctness of this motor winding design. If you further use the relationship between the star-triangle and frequency conversion, you can cover 200V50Hz ~ 607V60Hz range, fully meet all power standards in the world shown in Table I is a universal ultra-high efficiency motor, that is, only a series of motors, using different wiring Can be exported to any country in the world.

TABLE V. YE3-132M-4 7.5KW WORLD GENERAL MOTOR TEST DATA

V/f / parater	380V		420V		460	
	50HZ	60HZ	50HZ	60HZ	50HZ	60HZ
R (Ω)	0.579	0.495	0.541	0.55	0.639	0.605
I_O（A）	4.9	5.5	4.7	5	4.2	4.4
P_O(w)	0.291	0.372	0.32	0.38	0.317	0.332
I_N(A)	14.98	14.93	13.5	13.5	12.3	12.19
P_{CU}(w)	0.421	0.346	0.352	0.305	0.333	0.285
P_{AL}(w)	0.232	0.162	0.225	0.163	0.221	0.166
P_{FE}(w)	0.155	0.195	0.181	0.209	0.171	0.192
P_M(w)	0.091	0.126	0.097	0.132	0.112	0.108
P_S(w)	0.046	0.044	0.045	0.042	0.045	0.044
η_N (%)	89.12	89.54	89.28	89.81	89.46	90.41
Cosø	0.856	0.852	0.855	0.85	0.854	0.854
I_{ST}/I_N	6.504	7.16	6.53	7.34	6.23	7.08
T_{ST}/T_N	2.006	2.29	2.09	2.35	2.13	2.18
T_M/T_N	3.195	3.5	3.24	3.7	3.28	3.54
t (°K)	64.49	67.8	81.98	67.33	74.8	64.7
η_N=90.4% $\eta\min$=88.96% Cosø=0.84 I_{ST}/I_N=7.5 T_{ST}/T_N=2 T_M/T_N=2.3						

TABLE VI. TECHNICAL PARAMETERS UNDER THE MOST UNFAVORABLE WORKING CONDITIONS

V(v)	I_N(A)	P_N(w)	I_{ST}/I_N	T_{ST}/T_N
360	15.74	7.5	5.788	1.771
T_M/T_N	η	COSΦ	T(°C)	n_N
2.843	0.889	0.869	73.7	1460

VI. Application Prospects

The universal motor winding design method proposed in this paper has a simple outlet with two frequencies of 50Hz/60Hz and voltages ranging from $380 \pm 5\% \sim 460 \pm 5\%$V. The technical indicators are in full compliance with GB/T28715-2012 (IE3) standards and are a truly universal super-efficient motor. With this series of motors and construction machinery supporting, only need to correspond to the power standards of different countries, use the corresponding terminal, greatly simplifies the engineering machinery export supporting the complexity of the supply of the motor, for multinational engineering machinery, only according to the power standard The difference is that changing the terminal of the motor completely avoids accidents caused by the change of the power supply standard and causes the motor technical parameters to not work properly or burns the motor, and can effectively improve the economic benefits of the export enterprises of construction machinery. If it is necessary to further improve the performance of the motor and save costs, a boron-aluminum alloy or cast copper rotor [2, 3] can be used, or a special structure [4] can be used in the stator winding.

ACKNOWLEDGMENT

Hunan Province 2015 “100 Key New Product Promotion Plan” in the Industrial Sector Xiang Jing Xin Technology (2015) No. 85;

Hui Su, female, master, research direction of motor and control system design;

Hui Wen, male, master, chief engineer, research direction, motor design and system energy-saving reform;

Xinhua Zheng, male, undergraduate, engineer, research direction of motor design and manufacturing process;

Jianxin Su, male, undergraduate, associate professor, research direction of motor and control system design.

Corresponding author: Su Jianxin

REFERENCES

[1] Yunxi Tang, Nai Shi, Wenbao Shen, “The Theory and Operation of Electrical Machines,” Water Power Press, September 1982, p. 36

[2] Hui Su, Hui Wen, Xinhua Zheng, Jianxin Su, “Development of Boron-Aluminum Alloy Rotor Super-Efficient Motors” 13th Global Manufacturing and Management Conference, GCMM 2016.

[3] Xu Yang, Jiabin Yu, Dong Liang, Jian Huang. "Analysis of Technical Performance of Cast Copper Rotor Super-Efficient Three-Phase Asynchronous Motor", "Applications of Electrical Machines and Control", 2012, No. 4.

[4] Hongchao Sun, Wenhui Liu, Fuchun Wang, “Study on High-Efficiency Motor Design Methods”, “Explosion-proof Motors”, 2014.