ATLANTIS PRESS
*Advances in Engineering Research (AER), volume 157*
International Conference "Actual Issues of Mechanical Engineering" (AIME 2018)

# *Space connection investigation of functionally dependent knots in rotating assemblies*

Julia Anatolievna Bondarenko
Belgorod State Technological University after V.G. Shukhov
Belgorod, Russia
Kdsm2002@mail.ru

Mikhail Alexeyevich Fedorenko
Belgorod State Technological University after V.G. Shukhov
Belgorod, Kostyukova, 46, Russia

Tamara Mikhailovna Sanina
Belgorod State Technological University after V.G. Shukhov
Belgorod, Russia

***Abstract* — Nowadays industry development depends on the introduction of state-of-the-art technologies, equipment and new methods of equipment utilization. The issues of energy-saving, productivity increase, reliability, and equipment longevity are especially acute. Revealing regularities and development of mathematical models for 3D position accuracy of functionally dependent objects and mechanisms of rotating assemblies will give a possibility to develop technologies on their bases which will provide maintainability and the required precision of these assemblies.**

***Keywords— large-sized rotating equipment, precision, assembly, machine part, construction, position, coordinate system.***

## I. INTRODUCTION

Mills have many constructional peculiarities, such as working tools in the form of rotating cylindrical parts, bearing supports; large masses and dimensions of assemblies and parts (mill drum diameter is more than 3000 mm, mill length can be up to 15 m); constant rotation; strict requirements to working precision and assemblies; vibrations due to furnace position on stands; utilization in high dusting; comparative softness of the mill drum; dynamic loads and others.

## II. INFORMATIVE PART

There are high requirements to rotating equipment on rigidity and rotational axis position precision in conditions of great dynamic loads and vibration. That is why during manufacturing, assembly and maintenance it is important to observe high precision of 3D position for working elements, especially drum rotation axis, and assemblies axes of rotation as the equipment has large dimensions and masses. Observing precision requirements is an especially important functional problem as it provides reliable and durable utilization. Field research shows that mill vibrations depend on bearings' accuracy, their mobility in spherical blocks. Cases' masses unbalance is not of great importance, as there is a large amount of rolling material inside the case. Vibration may also be caused by wear and deviations in bearing and mount assemblies.

Determining accuracy in 3D position of parts, functionally linked in rotating assemblies, is in finding links between coordinate axes and their subassemblies. Here, component links of three-dimension chains are generalized coordinates, forming a corresponding vector $k_i$ = (A, B, G, $\lambda, \beta, \gamma$), determining coordinate axes position $(oxyz)_i$ of assembly executive surfaces relative to the system of its main stands. Vectors system $k_1, k_2, ..., k_i, ...k_n$ forms block matrix of manufacturing system links:

$$K = [k_i], \quad K = [k_1, k_2, ..., k_i, ..., k_n] \tag{1}$$

If functionally connected supporting node assemblies of a rotator aggregate (tube mill) (pic. 1, 2) are denoted in the consequence of their positioning, then we get a matrix of rotating aggregates assemblies connection in the form of a table, where each line corresponds to a mechanism, and separate elements on the line determine the position of this mechanism.

To calculate dimensional links all vectors are reduced to the main coordinate system of a rotating aggregate $0_1 X_1 Y_1 Z_1$ connected with the supporting node frame:

$$K^{(1)} = P_{\Sigma} \cdot K \tag{2}$$

where $P_{\Sigma}$ is a links transformation matrix; $K$ is a system links matrix:

$$\begin{vmatrix} K_1^{(1)} \\ K_2^{(1)} \\ \vdots \\ K_n^{(1)} \end{vmatrix} = \begin{vmatrix} P_1^{(1)} & & & 0 \\ & P_2^{(1)} & & \\ & & \ddots & \\ 0 & & & P_n^{(1)} \end{vmatrix} \cdot \begin{vmatrix} k_1 \\ k_2 \\ \vdots \\ k_n \end{vmatrix}. \quad (3)$$

TABLE I. LINKS MATRIX OF ASSEMBLEY AGGREGATES

| | | | | | | | | | | |
|---|---|---|---|---|---|---|---|---|---|---|
| 1. | force plate | 1 | | | | | | | | 0 |
| 2. | intermediate bearer | 1 | 2 | | | | | | | |
| 3. | spherical bearing | 1 | 1 | 3 | | | | | | |
| 4. | bearing case | 1 | 1 | 1 | 4 | | | | | |
| 5. | bush | 1 | 1 | 1 | 1 | 5 | | | | |
| 6. | covered pin | 1 | 1 | 1 | 1 | 1 | 6 | | | |
| 7. | hunch plate | 1 | 1 | 1 | 1 | 1 | 1 | 7 | | |
| 8. | aggregate case | 1 | 1 | 1 | 1 | 1 | 1 | 1 | 8 | |
| 9. | footing | 1 | 0 | 0 | 0 | 0 | 0 | 0 | 0 | 9 |

Elements $\Pi_\Sigma = \{\Pi_1^{(1)}, \Pi_2^{(1)}, ..., \Pi_n^{(1)}\}$ are block transformation matrixes:

$$\Pi_\Sigma = \begin{vmatrix} \begin{pmatrix} \pi_1^{(1)} & 0 \\ 0 & \pi_1^{(1)} \end{pmatrix} & & & 0 \\ & \begin{pmatrix} \pi_2^{(1)} & 0 \\ 0 & \pi_2^{(1)} \end{pmatrix} & & \\ & & \ddots & \\ 0 & & & \begin{pmatrix} \pi_n^{(1)} & 0 \\ 0 & \pi_n^{(1)} \end{pmatrix} \end{vmatrix} \quad (4)$$

Matrix elements $\pi_i$ determine angle cosine between the assembly bases $0_i X_i Y_i Z_i$ and the coordinate system of $0_1 X_1 Y_1 Z_1$ a rotating aggregate:

$$\pi_i = \begin{vmatrix} l_1 & l_2 & l_3 \\ m_1 & m_2 & m_3 \\ n_1 & n_2 & n_3 \end{vmatrix} = \begin{vmatrix} \cos(x_1 x_i) & \cos(x_1 y_i) & \cos(x_1 z_i) \\ \cos(y_1 x_i) & \cos(y_1 y_i) & \cos(y_1 z_i) \\ \cos(z_1 x_i) & \cos(z_1 y_i) & \cos(z_1 z_i) \end{vmatrix} \quad (5)$$

The assembly functional surfaces position in the system $0_1 X_1 Y_1 Z_1$ is characterized by the vector $D_i = (A_i, B_i, G_i, \lambda_i, \beta_i, \gamma_i)$, whose system determines the position matrix of the given angles of the rotating aggregate:

$$D = [D_i]; \quad D = [D_1, D_2, ... D_i ... D_n],$$

which is calculated according to the equation:

$$D = B \cdot P_\Sigma \cdot K \quad or \quad D = H \cdot K, \quad (6)$$

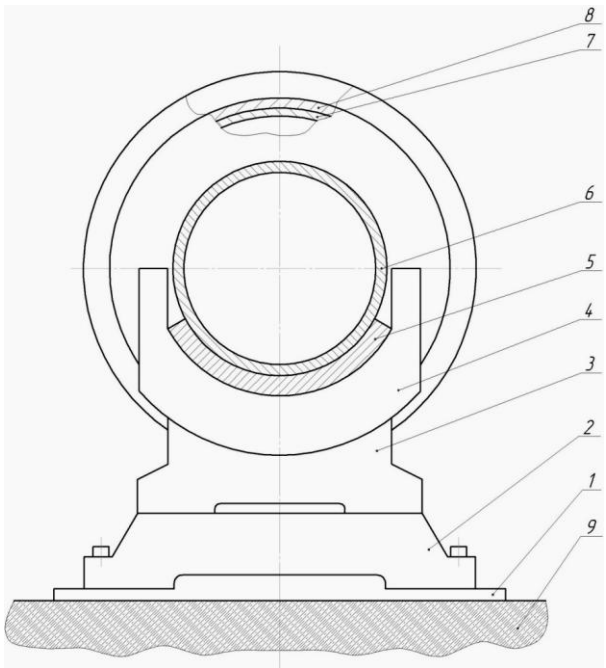


Fig. 1. Rotating aggregate assembly: 1 – force plate; 2 – intermediate bearer; 3 – spherical bearing; 4 – bearing case; 5 – bush; 6 – covered pin; 7 – hunch plate; 8 – aggregate case; 9 – footing

where $H$ is an operational matrix. $H = B \cdot \Pi_\Sigma$

Then in the expanded form, it will be:

$$\begin{vmatrix} D_1 \\ D_2 \\ D_3 \\ D_4 \\ D_5 \\ D_6 \\ D_7 \\ D_8 \\ D_9 \end{vmatrix} = \begin{vmatrix} H_{1.1} & & & & & & & & 0 \\ H_{2.1} & H_{2.2} & & & & & & & \\ H_{3.1} & 0 & H_{3.3} & & & & & & \\ H_{4.1} & H_{4.2} & H_{4.3} & H_{4.4} & & & & & \\ H_{5.1} & H_{5.2} & H_{5.3} & H_{5.4} & H_{5.5} & & & & \\ H_{6.1} & H_{6.2} & H_{6.3} & H_{6.4} & H_{6.5} & H_{6.6} & & & \\ H_{7.1} & H_{7.2} & H_{7.3} & H_{7.4} & H_{7.5} & H_{7.6} & H_{7.7} & & \\ H_{8.1} & H_{8.2} & H_{8.3} & H_{8.4} & H_{8.5} & H_{8.6} & H_{8.7} & H_{8.8} & \\ H_{9.1} & 0 & 0 & 0 & 0 & 0 & 0 & 0 & H_{9.9} \end{vmatrix} \cdot \begin{vmatrix} k_1 \\ k_2 \\ k_3 \\ k_4 \\ k_5 \\ k_6 \\ k_7 \\ k_8 \\ k_9 \end{vmatrix} \quad (7)$$

Hence, case position and axes of its rotation are determined:

$$Д_8 = H_{8.1}k_1 + H_{8.2}k_2 + H_{8.3}k_3 + H_{8.4}k_4 + H_{8.5}k_5 + H_{8.6}k_6 + H_{8.7}k_7 + H_{8.8}k_8. \quad (8)$$

One link position relative to the other $j$ is determined by the resultant of two vectors $Д_{ij} = Д_j - Д_i$. To determine assembly deviation in expression (7) instead of $K = [k_i]$, deviation matrix is used $\Delta_K = [\Delta_{k1}, \Delta_{k2}, ... \Delta_{ki} ... \Delta_{kn}]$, whose elements are linear and angular deviations of the

component links $\Delta k_i = (\Delta_{Ai}, \Delta_{Бi}, \Delta_{Гi}, \Delta_{\lambda i}, \Delta_{\beta i}, \Delta\gamma i)$. As the result, we can write the expression (7) as:

$$\Delta_{Д} = H \cdot \Delta_{K}, \tag{9}$$

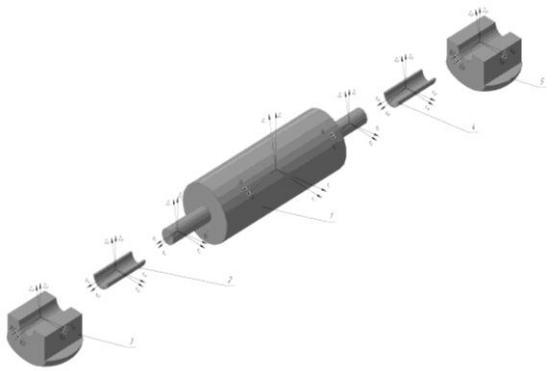

Fig. 2. Aggregate composition: 1 – aggregate case; 2, 4 – bush; 3, 5 – support

And in extended form:

$$\begin{vmatrix} \Delta_{D1} \\ \Delta_{D2} \\ \Delta_{D3} \\ \Delta_{D4} \\ \Delta_{D5} \\ \Delta_{D6} \\ \Delta_{D7} \\ \Delta_{D8} \\ \Delta_{D9} \end{vmatrix} = \begin{vmatrix} H_{1.1} & & & & & & & & 0 \\ H_{2.1} & H_{2.2} & & & & & & & \\ H_{3.1} & 0 & H_{3.3} & & & & & & \\ H_{4.1} & H_{4.2} & H_{4.3} & H_{4.4} & & & & & \\ H_{5.1} & H_{5.2} & H_{5.3} & H_{5.4} & H_{5.5} & & & & \\ H_{6.1} & H_{6.2} & H_{6.3} & H_{6.4} & H_{6.5} & H_{6.6} & & & \\ H_{7.1} & H_{7.2} & H_{7.3} & H_{7.4} & H_{7.5} & H_{7.6} & H_{7.7} & & \\ H_{8.1} & H_{8.2} & H_{8.3} & H_{8.4} & H_{8.5} & H_{8.6} & H_{8.7} & H_{8.8} & \\ H_{9.1} & 0 & 0 & 0 & 0 & 0 & 0 & 0 & H_{9.9} \end{vmatrix} \cdot \begin{vmatrix} \Delta k_1 \\ \Delta k_2 \\ \Delta k_3 \\ \Delta k_4 \\ \Delta k_5 \\ \Delta k_6 \\ \Delta k_7 \\ \Delta k_8 \\ \Delta k_9 \end{vmatrix} \tag{10}$$

Hence, parts deviation can be viewed as the total of deviations. Pin deviations will be:

$$\Delta Д_6 = H_{6.1}\Delta_{k1} + H_{6.2}\Delta_{k2} + H_{6.3}\Delta_{k3} + H_{6.4}\Delta_{k4} + H_{6.5}\Delta_{k5} + H_{6.6}\Delta_{k6}. \tag{11}$$

The received dependences allow calculating assembly precision parameters of the rotating aggregate, providing fulfilling its function.

To describe geometric precision of the rotating aggregate case lets denote main and supplementary supports by the corresponding coordinate axes: $(0XYZ)$ is a main bases system of coordinates; $(oxyz)_1 \ldots (oxyz)_9$ pins' coordinates.

Coordinate systems of supplementary supports $(oxyz)_i$ relative to the system $(0XYZ)$ of the main bases are determined by corresponding vectors $k_1, k_2, k_3, k_4$, whose components are generalized coordinates.

So, supplementary supports matrix of a rotating aggregate case $K = [k_i]$ is determined by four vectors:

$$K = [k_1, k_2, k_3, k_4].$$

Supplementary supports vector $k_1$, determining rotating aggregate case position in the most stressed place, determining case vibration relative rotation axis, that is clearance between the pin and the bearing, and consequently, it determines the lubrication quality, case rotation axis displacement and misalignment of a pin rotation axis.

Admissible maximum deviations on vector linear components $k_1$ are determined by corresponding matrixes:

$$\Delta_{k1}^{B} = \begin{vmatrix} \Delta_A^B \\ \Delta_B^B \\ \Delta_G^B \end{vmatrix}, \quad \Delta_{k1}^{H} = \begin{vmatrix} \Delta_A^H \\ \Delta_B^H \\ \Delta_G^H \end{vmatrix}. \tag{12}$$

Rotating aggregate case is a long hollow cylinder, consisting of several separate short cylinders, that is why, the case has dimensional deviations due to significant admittances for separate cylinders diameters in three coordinate directions $\Delta_{Lx}, \Delta_{Ly}, \Delta_{Lz}$.

Calculation of deviations for rotating aggregate case dimensions $\Delta_{Lx}, \Delta_{Ly}, \Delta_{Lz}$ with the account of geometry deviations $(h_x, h_y, h_z)$, turns $(\Delta_\lambda, \Delta_\beta, \Delta_\gamma)$ and distances $(\Delta_A, \Delta_B, \Delta_G)$ we can do using the known matrix formula:

$$\begin{vmatrix} \Delta_{Lx} \\ \Delta_{Ly} \\ \Delta_{Lz} \end{vmatrix} = \begin{vmatrix} \Delta_A \\ \Delta_B \\ \Delta_G \end{vmatrix} + \begin{vmatrix} 0 & -\Delta_\gamma & \Delta_\beta \\ \Delta_\gamma & 0 & -\Delta_\gamma \\ -\Delta_\beta & \Delta_\lambda & 0 \end{vmatrix} \cdot \begin{vmatrix} x \\ y \\ z \end{vmatrix} + \begin{vmatrix} h_x \\ h_y \\ h_z \end{vmatrix} \tag{13}$$

where x, y, z are boundary points coordinates of the surfaces under consideration.

Obstacles in the material movement inside the rotating aggregate case appear due to the deviations, formed along axes X and Z. With this in mind, to calculate upper $(\Delta_{Lx}^B, \Delta_{Lz}^B)$ and lower $(\Delta_{Lx}^H, \Delta_{Lz}^H)$ boundary deviations of the rotating case in the directions perpendicular to material motion trajectory let's use formulas:

$$\begin{vmatrix} \Delta^B_{Lx} \\ \Delta^B_{Lz} \end{vmatrix} = \begin{vmatrix} \Delta^B_A \\ \Delta^B_G \end{vmatrix} + \begin{vmatrix} 0 & -\Delta^H_\gamma & \Delta^B_\beta \\ -\Delta^H_\beta & -\Delta^B_\lambda & 0 \end{vmatrix} \cdot \begin{vmatrix} x \\ y \\ z \end{vmatrix} + \begin{vmatrix} h^B_x \\ h^B_z \end{vmatrix} \quad (14)$$

$$\begin{vmatrix} \Delta^H_{Lx} \\ \Delta^H_{Lz} \end{vmatrix} = \begin{vmatrix} \Delta^H_A \\ \Delta^H_G \end{vmatrix} + \begin{vmatrix} 0 & -\Delta^B_\gamma & \Delta^H_\beta \\ -\Delta^B_\beta & -\Delta^H_\lambda & 0 \end{vmatrix} \cdot \begin{vmatrix} x \\ y \\ z \end{vmatrix} + \begin{vmatrix} h^H_x \\ h^H_z \end{vmatrix} \quad (15)$$

Rotating aggregate case should be considered an element of high strength, as its manufacture precision and position determine functioning of the whole aggregate, which is strongly related with one of the most important factors – pins durability. Deviations in manufacture precision and assembly during utilization cause dynamic loads resulting in destruction of some aggregate assemblies, in particular, the case or the tube screw.

For the smooth motion of the material inside a rotating aggregate, it is necessary for the inside surface inclination to be even, without local peaks, as they slow down the material movement, increase walls thickness and worsen milling process. All this results in uneven load, change of the case form, uneven pin load and the case displacement.

Aggregate case deviations are determined by positioning an error vector:

$$\omega_n = (a_n, b_n, c_n, \lambda_n, \beta_n, \gamma_n) \quad (16)$$

where $(a_n, b_n, c_n)$ are displacement parameters; $(\lambda_n, \beta_n, \gamma_n)$ are rotation parameters.

Vector components $\omega_n$ are determined by precision of case positioning on the bearings $\omega_n = \omega_y$ .

To determine case position on the bearings and calculate possible positional declinations we can use analytical methods of support theory.

When basing pins' surfaces contact with executive support surfaces, theoretical support points appear as contact points, whose coordinates determine vector components of installation error $\omega_y$ .

Coordinates of support contact points in the system, $x_p, y_p, z_p$ can be divided into two groups: normal $\Delta x_i, \Delta y_i, \Delta z_i$ determining support points deviations normal to basing surfaces direction and planned $x_i, y_i, z_i$ determining supporting points position on three basin surfaces.

Case basing is done in three planes and is determined by normal coordinate's matrix:

$$T = (\Delta z_1, \Delta z_2, \Delta z_3, \Delta x_4, \Delta x_5 \Delta y_6) \quad (17)$$

where $(\Delta z_1, \Delta z_2, \Delta z_3)$ are normal coordinates of the support determining displacement along axis Z and rotation around axes *X* and *Y*;

$\Delta x_4, \Delta x_5$ are normal coordinates of the guiding base, which determine case displacement along axis *X* and rotation around axis *Z*;

$\Delta y_6$ is a supporting base coordinate determining displacement along axis Y;

Hence, positioning deviation can be calculated according to the formula:

$$\omega_y = Q \cdot T \quad (18)$$

where Q is dimensional constraints matrix 6x6; T is normal coordinates matrix.

Matrix components $Q = |q_{ij}|$ are linear functions of corresponding plane coordinates of support points $q_{ij} = f(x_i, y_i, z_i)$. In the extended form the equation looks like this:

α + β = χ. (1) (1)

$$\begin{bmatrix} a_y \\ b_y \\ c_y \\ \lambda_y \\ \beta_y \\ \gamma_y \end{bmatrix} = \begin{bmatrix} 0 & 0 & 0 & q_{14} & q_{15} & 0 \\ 0 & 0 & 0 & 0 & 0 & q_{26} \\ q_{31} & q_{32} & q_{33} & 0 & 0 & 0 \\ q_{41} & q_{42} & q_{43} & 0 & 0 & 0 \\ q_{51} & q_{52} & q_{53} & 0 & 0 & 0 \\ 0 & 0 & 0 & q_{64} & q_{65} & 0 \end{bmatrix} \cdot \begin{bmatrix} \Delta z_1 \\ \Delta z_2 \\ \Delta z_3 \\ \Delta x_4 \\ \Delta x_5 \\ \Delta y_6 \end{bmatrix} \quad (19)$$

According to (19), installation deviation parameters formed on the support base are determined by the expression:

$$\begin{vmatrix} c_y \\ \lambda_y \\ \beta_y \end{vmatrix} = \frac{1}{C} \begin{vmatrix} (x_2 y_3 - x_3 y_2) & (x_3 y_1 - x_1 y_3) & (x_1 y_2 - x_2 y_1) \\ (x_3 - x_2) & (x_1 - x_3) & (x_2 - x_1) \\ (y_3 - y_2) & (y_1 - y_3) & (y_2 - y_1) \end{vmatrix} \cdot \begin{vmatrix} \Delta z_1 \\ \Delta z_2 \\ \Delta z_3 \end{vmatrix} \quad (20)$$

Where C is a determinant:

$$C = \begin{vmatrix} 1 & y_1 & -x_1 \\ 1 & y_2 & -x_2 \\ 1 & y_3 & -x_3 \end{vmatrix} \quad (21)$$

In the received expression coordinates $(x_1, y_1), (x_2, y_2), (x_3, y_3)$ are plane coordinates of support points of the base (plane *X0Y*).

In its turn, installation deviations components formed on the guiding base are determined by the expression:

$$\begin{vmatrix} a_y \\ \gamma_y \end{vmatrix} = \begin{vmatrix} -\dfrac{y_5}{y_4 - y_5} & \dfrac{y_4}{y_4 - y_5} \\ -\dfrac{1}{y_4 - y_5} & \dfrac{1}{y_4 - y_5} \end{vmatrix} \cdot \begin{vmatrix} \Delta x_4 \\ \Delta x_5 \end{vmatrix} \tag{22}$$

where $y_4$ and $y_5$ are plane coordinates of the guiding base supporting components (plane Y0Z).

Parameter $b_y$, formed on the supporting base and determining case displacement along axis Y is:

$$b_y = \Delta y_6 \tag{23}$$

According to the expressions (20…23), the numerical definition of case positioning deviation components comes to determining numerical values of supporting points normal coordinates deviations on the setting base $(\Delta z_1, \Delta z_2, \Delta z_3)$, on the guiding base $(\Delta x_4, \Delta x_5)$, on the supporting base $(\Delta y_6)$.

Numerical values of supporting points plane coordinates are determined according to case dimensional sizes and coordinate system 0XYZ position on its main bases.

Declinations of normal coordinates $(\Delta z_1, \Delta z_2, \Delta z_3)$ are determined as vertical displacement of the case centre, conditioned by admissible deviation from the base surface plane.

At random distribution according to equal odds law, there is a uniform density of deviation distributions:

$$F(\Delta_{Zi}) = \begin{cases} 1/h & at \quad \Delta_{Zi} \in (0, h) \\ 0 & at \quad \Delta_{Zi} \notin (0, h) \end{cases} \tag{24}$$

Normal coordinates' deviations $\Delta x_4, \Delta x_5$ in plane X0Y are conditioned by joint clearances.

At case basing on structured bases, numerical values of plane coordinates $(x_i, y_i, z_i)$ do not change. Support points normal coordinates are random $(\Delta x_i, \Delta y_i, \Delta z_i)$, their values depend on fact geometry declinations of case main surfaces and clearances size.

Clearance S between the pin and the bearing results in unstable case basing, when components change from upper $\omega_y^u$ to lower $\omega_y^l$ values:

$$\omega_y^u = (a_y^u, b_y^u, c_y^u, \lambda_y^u, \beta_y^u, \gamma_y^u), \tag{25}$$

$$\omega_y^l = (a_y^l, b_y^l, c_y^l, \lambda_y^l, \beta_y^l, \gamma_y^l). \tag{26}$$

Mathematical expectations are the most probable:

$$m(\omega_y) = \lfloor m(a_y), m(b_y), m(c_y), m(\lambda_y), m(\beta_y), m(\gamma_y) \rfloor \tag{26}$$

Most probable non-zero components of setup tolerances can be calculated as conditional mathematical expectations according to the formulas:

- for setting surface:

$$m[c_y \mid c_y \neq 0] = \frac{1}{2} h; \tag{27}$$

$$m[\lambda_y \mid \lambda_y \neq 0] = \frac{1}{4} \cdot \frac{h}{(y_{\max} - y_{\min})}; \tag{28}$$

$$m[\beta_y \mid \beta_y \neq 0] = \frac{1}{4} \cdot \frac{h}{(x_{\max} - x_{\min})} \tag{29}$$

- for guiding base:

$$m[a_y \mid a_y \neq 0] = \frac{1}{2} S; \tag{29}$$

$$m[\gamma_y \mid \gamma_y \neq 0] = \frac{1}{6} \cdot \frac{S}{(y_{\max} - y_{\min})} \tag{30}$$

## III. Conclusion

The 3D position of functionally related mill assemblies is determined and relations between coordinate systems of assembly are found, that allows determining their position and mutual influence during utilization.

The tabular matrix of mill assembly constraints is received where each line corresponds to maximum, and line unit

elements denote subassemblies, determining the mechanism position, as the result, the received dependences allow calculating assemblies precision parameters, which provide their functioning.

Technological methods of compensating mill case declinations on movable supporting elements are determined, as well as mathematical expectations of the setting base and guiding one determined.

## Acknowledgement

The article was prepared within development program of the Flagship Regional University on the basis of Belgorod State Technological University named after V.G. Shoukhov, using equipment of High Technology Center at BSTU named after V.G. Shoukhov

## References

[1] E.L. Airapetov, I.A. Birger, V. L. Veits, et al. Vibrations in technicse, Vibrations of machines, constructions and their elements, 1980.

[2] F.G. Banit, Cement plants equipment repair: textbook, the 2d issue. Added issue, M. : Gosstroiizdat, 1958.

[3] F.G. Banit, G.S. Krizhanovskii, B.I. Yakubovich, Utilization, maintenance and equipment setting in the industry of building materials: the textbook for vocational schools in building materials industry, M.: Stroiizdat, 1971.

[4] F.G. Banit, O. A. Nivizhskii, Mechanical equipment of cement plants: the textbook for vocational schools in building materials industry, 2d Issue, revised and added, M. : Machine building industry, 1975.

[5] F.G. Banit, B.I. Yakubovich, Utilization, maintenance and equipment installation for building material plants: the textbook for students of vocational schools, M. : Stroiizdat, 1964

[6] A.I. Boganov, Mechanical equipment for cement plants: study aid for technical specialities of chemical-technological universities and departments, M. : Machgiz, 1961.

[7] Yu. A. Bondarenko, Technological methods and ways of performance restoration of a large-sized industrial equipment without its disassembling with the help of desk-side machine units, Monography, Belgorod, 2005.

[8] N.Ye. Drozdov, Utilization, maintenance ant trial of building materials equipment: the textbook for university speciality, “Mechanization of equipment for plants of building materials, goods and constructions”, M.: High school, 1979.

[9] N.Ye. Drozdov, M.Ya. Sapozhnikov, Maintenance and installation of equipment for building materials plants: the textbook for universities, Stroiizdat, 1967.

[10] N.Ye. Drozdov, Utilization and maintenance of machines and plants of non-deposit building materials: study aid for universities, M. : Stroiizdat, 1969.

[11] A.Yu. Albagachev, S.K. Ambrosimov, O.B. Bavikin, A.N. Bolshakov, Yu.A. Bondarenko, O.F. Vyacheslavova, Yu.I. Yeremenko, D.M. Zabelian, S.A. Zaitsev, M.A. Kozlova, Ye.Yu. Krupenya, V.A. Lebedev, I. Ye. Lobanov, A.V. Morozova, N.A. Pelipenko, V.A. Pukhalskii, L.A. Ribak, S.N. Sanin, T.M. Sanina, A.G. Serebrennikova et all, New machine buiding technologies, equipment and tools, Moscow, 2015.

[12] S.K. Abrosimovich, Yu.A. Bondarenko, A.S. Vereshaka, A.D. Verkhoturov, A.V. Kirichek, A.M. Kozlov, Ye.V. Kovaleva, I. Ye. Lobanov, G.Ye. Malutin, Ye.B. Mokritskaya, B.Ya.Mokritskaya, A.V. Morozova, A.A. Musaev, M.N. Nagorkin, V.V. Nagorkina, L.A. Ribak, P.A. Sablin, G.M. Sevastianov, M.A. Fedorenko, V.P. Fedorov, New machine buiding technologies, equipment and tools. Moscow, 2016.

[13] T.M. Sanina, M.A. Fedorenko, A.A. Pogonin, A.G. Skhirladze, Providing form precision at restoration of assemblies of milling aggregates, Maintenance. Restoration. Modernization, Vol. 9, pp. 43-46, 2009.

[14] M.A. Fedorenko, Yu.A. Bondarenko, Forces action on the deskside machine unit, on the precision of machining of the internal surface of the shaft, Bulliten of Belgorod State technological university named after V. G. Shukhov, Vol. 4, pp. 48-49, 2007.

[15] M.A. Fedorenko, Y.A. Bondarenko, A.A. Pogonin, G. Skhirtladze, Repair of large shaft tube mills rotational cutting using deskside machines, Journal of repair, restoration, modernization, Vol. 10, pp. 13-15, 2004.