ATLANTIS PRESS
Advances in Computer Science Research, volume 77
8th International Conference on Management and Computer Science (ICMCS 2018)

Comparative Study on Two New Analog Circuit Fault Diagnosis Methods

Wang Tao[1, a] and Sun Wen[2, b*]
[1]XIANNING VOCATIONAL TECHNICAL COLLEGE
[2]Tellhow Polytron Technologies Inc
[a]wt720404@126.com, [b]zhaoleies@163.com
* The corresponding author

Keywords: Wavelet transform; BP neural network; Analogous circuit; Fault diagnosis

Abstract. Analog circuits are widely used in various fields. With the increasing complexity of electronic systems, the maintenance of electronic circuits is particularly important. The analog circuit is influenced by its own nonlinearity and environment interference, and the system fault types are complex and diverse. Therefore, finding an effective fault diagnosis method is very important. Based on this, this paper analyzes the characteristics of wavelet transform and neural network fault diagnosis methods through simulation experiments, verifies the feasibility of the two methods to identify faults, and provides experience guidance for future fault diagnosis.

Introduction

The problem of analog circuit fault diagnosis has been a hot topic, but also a bottleneck problem. As analog circuits tend to diversify, traditional methods of circuit fault diagnosis are difficult to meet the requirements, and it has become increasingly urgent to find a more efficient diagnosis method. Wavelet transform and neural network are used in fault diagnosis of circuits as two new detection methods, which improve the defects of traditional diagnosis methods and provide a new direction for fault diagnosis of analog circuit systems.

Based on the difference of the theory and principle of wavelet transform and neural network, this paper systematically introduces the characteristics of the two methods and their application scope. Combined with the case of fault diagnosis of analog circuit system, the detection characteristics of these two methods are compared and analyzed.

Comparison of two kinds of Analog Circuit Fault diagnosis theories based on Wavelet transform and Neural Network

Wavelet Transform Theory. Wavelet analysis is a new time frequency analysis method developed on the basis of Fourier analysis. The wavelet transform analysis has a strong adaptability for non-stationary signal analysis. It has good time-frequency local analysis and signal de-noising function, and can effectively remove all kinds of signal interference. The unique advantages of wavelet analysis solve other problems in analog circuit fault signal testing. Wavelet analysis has become a new technology in the field of signal analysis and processing. It is widely used in signal processing, fault diagnosis and detection, etc.

Wavelet Multiresolution Analysisy is the way which divides the original signal into different frequency bands. Each frequency band is not overlapping and monotone, and then the signal is analyzed in different frequency bands after decomposition.

Let $\{V_n; n \in Z\}$ be an orthogonal multi-resolution analysis with a scale function φ. then the relation is shown in the following expressions 1-1.

$$\varphi(x) = \sum_{k \in Z} h_k \varphi(2x - k) \qquad (1\text{-}1)$$

Inside, $h_k = 2\int_{-\infty}^{\infty} \varphi(x)\overline{\varphi(2x-k)}dx$, And there's a $\varphi(2^{j-1}x-l) = \sum_{k\in Z} h_{k-2l}\varphi(2^j x-k)$,

Sometimes the equivalent is $\varphi_{j-i,l} = \frac{\sqrt{2}}{2}\sum_{k\in Z} h_{k-2l}\varphi_{jk}$, Of which $\varphi_{jk}(x) = 2^{\frac{j}{2}}\varphi(2^j x-k)$.

The tree of wavelet multiresolution decomposition is shown in Fig. 1-1 below.

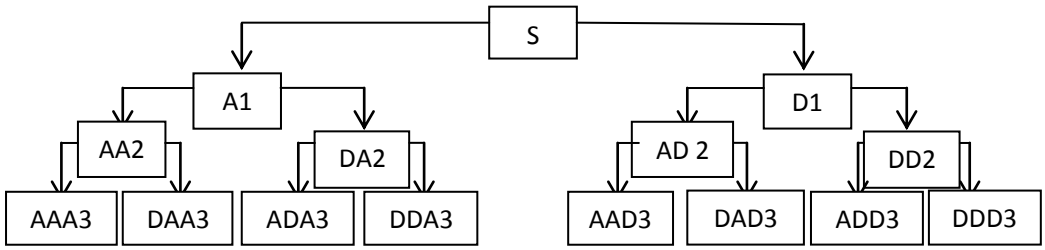

Figure 1-1. Finite Tree Graph of Wavelet packet decomposition

Fault Diagnosis Theory of Analog Circuits based on Wavelet Transform. When the analog circuit fails, the energy distribution of the output frequency band of the electric signal in the circuit will change. The signal in the circuit is extracted, wavelet transform is made, the energy of each frequency band is decomposed by time-frequency change method, and the singularity points in each frequency domain curve are tried to diagnose the fault of analog circuit.

Neural Network Theory. BP algorithm is the core of BP neural network. BP neural network is generally composed of input layer, one or more hidden layers, and output layer. The nonlinear function relationship is constructed by input layer, hidden layer and output layer. For a given training sample, the nonlinear function relation of the fitting is stabilized by adjusting the weight of the sample, and the nonlinear function relation between the input layer and the output layer is constructed.

Let the input vector of the network be $x = [x_1, x_2, , , , x_j]$ (j is the number of input layer nodes). Hidden layer output vector $Z = [Z_1, Z_2, , , , Z_i]$ (i is the number of hidden layer nodes). Output vector $Y = [Y_1, Y_2, , , , Y_k]$ (k is the number of nodes in the output layer), w_{ij} is the hidden layer weight, w_{ki} is the output layer weight, Hidden layer threshold is a_i, Output layer threshold is b_k, expected output is $E = [E_1, E_2, , , , E_j]$.

By constantly adjusting the weights, the learning process ends when $W_i(i = 1, \cdots, n)$ is stable for all samples.

Neural Network Fault Diagnosis Theory for Analog Circuits. The signal transmission of analog circuit is nonlinear. The nonlinear function relationship between input function and output function is constructed by neural network, so there is a correlation between analog circuit fault diagnosis and neural network non-line function. By constructing the nonlinear function relationship between the input signal and the output fault signal of analog circuit, the fault of analog circuit is diagnosed [4,5].

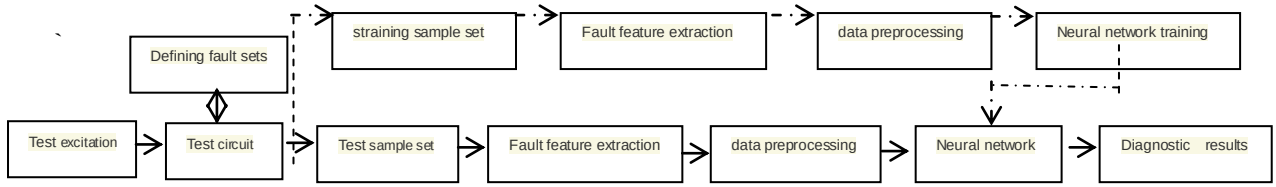

Figure 2-1. Finite Fault diagnosis flow of Analog Circuit based on Neural Network

Simulation Experiment and Data Contrast Analysis of Analog Circuit Fault diagnosis

In this section, the feasibility of wavelet transform analysis and neural network for circuit fault

identification is verified by simulation experiments.

The classical sallen-key bandpass filter circuit is selected as the test analysis circuit. The circuit topology is shown in Fig. 3-1.

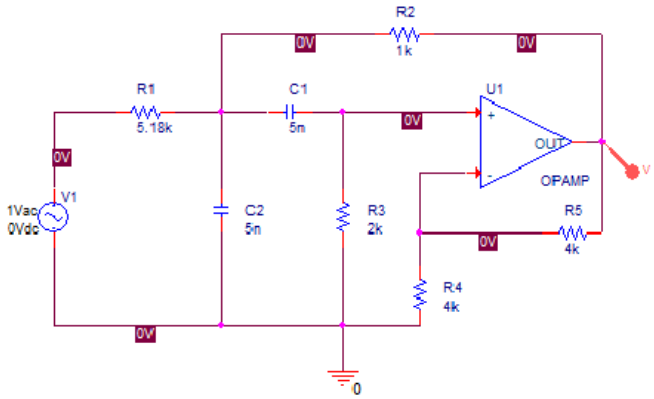

Figure 3-1. Finite Analog circuit bandpass filter circuit diagram

Design fault circuit condition in which R2 and C1 are increased by 50% and R3 and C2 are reduced by 50%. By testing the electrical signals of each electronic component, the calculation results are normalized. The results of wavelet transform analysis and neural network analysis are shown in Table 3-1~2.

Table 3-1 Analysis of analog circuit fault detection results by wavelet transform

Output signal			Fault code	status
0.0001	0.0012	0.0009	000	F0(normal)
0.0007	0.0013	0.9521	001	F1(R2 increased by 50%)
0.0025	0.9932	0.0062	010	F2(Reduce R3 by 50%)
0.0018	0.9843	0.9316	011	F3(C1 increased by 50%)
0.9753	0.0036	0.0084	100	F4(Reduce C2 by 50%)

Table 3-2 Fault Detection of Analog Circuits based on Neural Network Analysis

Output signal			Fault code	status
0.0084	0.0074	0.0017	000	F0(normal)
0.0057	0.0013	0.8693	001	F1(R2 increased by 50%)
0.0042	0.8795	0.0009	010	F2(Reduce R3 by 50%)
0.0024	0.8942	0.9021	011	F3(C1 increased by 50%)
0.7942	0.0053	0.0092	100	F4(Reduce C2 by 50%)

From the analysis of tables 3-1 and tables 3-2, we can see, wavelet transform analysis and neural network can effectively identify analog circuit faults and accurately locate fault locations and states. Both methods can be used for fault identification of analog circuits. The numerical analysis of the output signal in the table shows that the output signal of wavelet transform analysis is more stable and accurate, and the advantage of wavelet transform analysis is more obvious than that of neural network analysis.

Conclusion

Both wavelet transform analysis and neural network algorithm can identify fault location and type efficiently. Because the neural network algorithm is limited by the initial sample size, the stability of the constructed nonlinear function is poor. However, wavelet transform analysis is sensitive to

the singularity signal, and can identify the singular signal accurately as well as effectively. Through the comparison and analysis of simulation experiments, it is found that the dentification signal output by wavelet transform is more stable and accurate, and the recognition degree of fault diagnosis is higher.

Reference

[1] Wang Xiangwen, li Zhihua. Fault diagnosis of Radar filter based on Wavelet transform and Neural Network[J]. Electronic design engineering, 2016, 24(8):83-85.
[2] Zhu Wenji, He Yi Gang. Neural Network method for soft Fault diagnosis of tolerance Analog Circuits[J]. Journal of electrical technology, 2009, 24(11):184-191.
[3] Tan Yanghong, He Yigang. A New Fault Dictionary method for Analog Circuit Fault diagnosis[J]. Microsystem electronics, 2001, 31(4):252-254.
[4] Zhao Dezan, Xing Jun, Wang Zhisen. BP Neural Network based on embedded system and its Application in Analog Circuit Fault diagnosis[J]. Journal of Dalian University of Technology, 2016(1).
[5] Dai Yu, Peng Liangyu. Fault diagnosis of Analog Circuit based on BP Neural Network[J]. Modern electronic technology, 2013(16):9-11.
[6] Peng L, Fang W. Heterogeneity of Inferring Reputation of Cooperative Behaviors for the Prisoners' Dilemma Game [J]. Physica A: Statistical Mechanics and its Applications, 2015, 433: 367–378.