A X-band Microwave Monolithic Low-noise Amplifer

Dongxu Yue, Yao Yao, Kaiqi Wan

Sichuan Institute of Solid State Circuits, China Electronics Technology Group Corp., Chongqing 400060, P. R. China

Keywords: X-band, LNA, low noise, amplifer

Abstract: a X-band microwave monolithic low-noise amplifer is presented in this paper. This LNA has been realized by 0.15um GaAs process.it exhibits high performance: over 8GHz~12GHz, power gain is above 20dB; the ripple variation of power gain is less than ±0.7dB; The 1dB compression point is more than 10dBm; input return loss is lower than -15dB; output return loss is lower than -15dB; Current less than 40mA.

1. Introduction

MMIC is a microwave circuit that makes active and passive components on the same semiconductor substrate. It has low loss, low noise, wide frequency band, large dynamic range, high power, and additional a series of advantages such as high efficiency, and can reduce the size of electronic equipment, reduce weight, and reduce the price. widely used in microwave communication, GPS transceivers, remote sensing remote control, radar, electronic countermeasures, radio astronomy, etc. among them, military electronic equipment and civilian electronic products are very important

The low noise amplifier is used as the first stage amplification module of the RF receiving system. The main function is to amplify the low voltage signal from the antenna for small signal. Its performance factors such as noise figure, nonlinearity, stability and sensitivity directly determine the performance of the entire receiver system. Therefore, it is important to design a low noise amplifier with low noise figure, sufficient power gain, good operational stability, and sufficient bandwidth and large dynamic range.

2. Main design indicators for low noise amplifiers

2.1 Power gain and gain flatness

Power gain is defined as the ratio of the real power obtained by the load to the actual power input to the network when the network input and output are arbitrary impedances.

Gain flatness refers to the fluctuation of the power gain in the operating frequency band. It is usually expressed as the difference ΔGp (dB) between the highest gain and the lowest gain. For low noise amplifiers, it is usually desirable to make the gain change as gentle as possible throughout the operating band. The gain is abrupt, so the smaller the ΔGp(dB) value, the better.

2.2 Input and output voltage standing wave ratio

In many cases, the characteristics of a microwave transistor amplifier are described by the input voltage standing wave ratio and the output voltage standing wave ratio. In low noise amplifiers, the input and output voltage standing wave ratios characterize the matching of their input and output loops.

In designing the matching circuit of the low noise amplifier, the input matching network is generally designed as the optimal noise matching network instead of the optimal power matching network to obtain the minimum noise, and the output matching network is generally used to obtain the maximum power and the lowest standing wave ratio. design. Therefore, there is always some kind of mismatch at the input of the low noise amplifier.

2.3 Noise figure

Low-noise amplifiers are typically placed at the front end of the receiver to minimize noise and improve signal-to-noise ratio to effectively process the received weak RF signals, making noise the most important indicator for low noise amplifiers.

The noise factor is a measure of the signal-to-noise ratio degradation caused by a system. That is, after the signal passes through the system, the output signal-to-noise ratio deteriorates due to the noise generated by the system itself, and the multiple of the signal-to-noise ratio decreases or deteriorates. Usually the noise figure is expressed in decibels (dB).

2.4 Stability

The stability of the RF amplifying circuit refers to the ability of the amplifying circuit to suppress environmental changes (such as temperature changes, frequency drift, signal source impedance, and load impedance characteristics) to maintain normal amplification characteristics. The stability of the RF amplifying circuit is a very important factor in maintaining the normal operation of the communication system.

In the stability analysis of the RF amplifying circuit, the amplifying circuit is usually analyzed as a two-port network with known S parameters.

Due to the reverse voltage transmission characteristic of the transistor, the voltage reflection coefficient TL of the load terminal can be reflected at the input port of the amplifier through the reverse voltage transmission coefficient S_{12} of the transistor, that is, there is a certain relationship between Γ_{IN} andΓ_L. After the input RF signal passes through the forward amplification, load reflection and reverse transmission of the transistor, it is reflected as a reflected signal at the input end, and its amplitude may be larger than the input signal amplitude, resulting in instability of the amplification circuit. Similarly, the reflection coefficients Γ_{OUT} and Γs at the output of the amplifier circuit have a similar relationship. Therefore, the stability of the amplifier circuit is not only related to the s-parameter, but also related to the input and output matching network of the amplifying circuit, the source impedance and the load impedance. In addition, since the S-parameter of the transistor two-port network depends on the operating frequency, the RF transistor amplifying circuit can work normally at certain frequencies, and at other frequencies, it cannot work normally. Therefore, the stability of the circuit is also related to the operating frequency.

3. Low noise wideband amplifier structure

The power gain of various forms of microwave transistors is attenuated by about 6 dB per octave as the frequency increases. In order to implement a wideband amplifier, the gain must be compensated to reduce the low side gain. In general, low-noise broadband amplifiers can be broadly classified into balanced amplifiers, feedback amplifiers, distributed amplifiers, and active and lossy matched amplifiers.

3.1 Balance amplifier

Balanced amplifiers are widely used for low noise power amplification in the microwave band due to its low noise characteristics. It has better stability and input and output return loss than single-tube amplifiers.

There are many advantages to balancing amplifiers. First, the balanced amplifier can be designed as a separate amplifier to achieve flat gain, noise figure, etc., while the input and output standing wave ratios of the balanced amplifier depend on the coupler. Second, the balanced amplifier has higher stability. If one of the amplifiers fails, the balanced amplifier unit will still reduce the gain and still operate, and the balanced amplifier's output power is twice that of a single amplifier; finally, the balanced amplifier unit is easy to cascade because each unit is isolated by the coupler.

At the same time, the balanced amplifier also has certain disadvantages. There are two amplifiers in the balanced amplifier unit, which consume more DC power and are larger in size. In addition, there is actually a finite insertion loss associated with the amplifier.

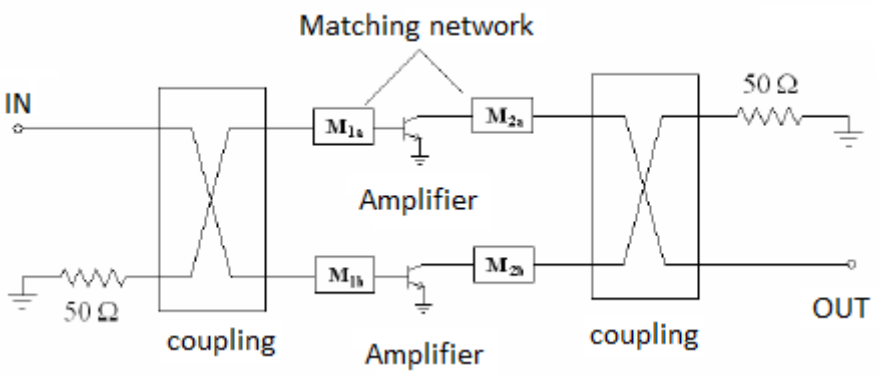

Figure 1 Balanced amplifier

3.2 Negative feedback amplifier

A negative feedback amplifier is an effective form of increasing the bandwidth of the amplifier. The main purpose of using negative feedback is to compensate the characteristics of the microwave tube increasing the gain with frequency, and by lowering the gain of the low end of the frequency, a good gain flatness of the entire frequency band is obtained. While changing the gain flatness of the amplifier, the input and output standing wave ratios of the amplifier are also improved, but the introduced negative feedback deteriorates the noise figure..

3.3 Distributed amplifier

Microwave transistors necessarily have input and output capacitors. In conventional matching methods, the inductive components and the transmission line are phase shifted to offset the input and output capacitances, so it is impossible to get a good match in a wide frequency band. The distributed amplifier absorbs the input and output capacitors and resistors of the transistor into the input and output transmission lines, so that a plurality of transmission lines and a plurality of transistors constitute a distributed lossy transmission line. Therefore, as long as the characteristic impedance of the transmission line and the impedance of the load are equal, it is equivalent to a lossy uniform transmission line without frequency limitation, so that the microwave signal propagates in a traveling wave manner.

Therefore, the distributed amplifier is mainly composed of a transmission line, an input feeder, a semiconductor device, and an output feeder, and the operating frequency bandwidth can be from a very low frequency to a cutoff frequency of the semiconductor device.

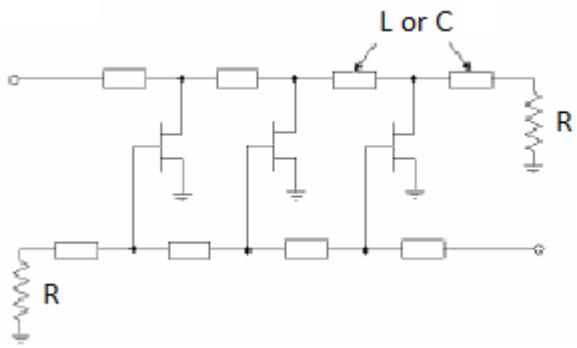

Figure 2 Distributed amplifier

4. Circuit structure selection

Considering that if a first-stage amplifier is used to complete the bandwidth requirement with a tube, the circuit form should use a negative feedback type circuit; however, the disadvantage of the negative feedback type amplifier is that the noise figure is high, which makes it difficult to meet the low noise requirement, and The gain target is also difficult to achieve, so it is more difficult to use a

first-order amplifier. Designed as a two-stage amplifier, the noise figure analysis of the cascaded network shows that the noise figure is mainly determined by the first-stage circuit in the two-stage amplifier circuit, so that in the circuit design, the first-stage amplifier circuit should focus on noise reduction. The design, while the second stage amplifying circuit focuses on the design of the boost gain.

The specific requirements of the matching circuit are: input matching is low noise matching, and has better input standing wave; inter-stage matching requires low noise and maintains flat gain; output matching is high gain matching, gain is flat and output standing wave is good .

Since the design is X-band, its 1/4 wavelength line is about 1cm, and the size is still very large. It is not suitable for use in MMIC, so it is not considered to use too many microstrip lines for matching, and the lumped component is in X. The band has a relatively good model to characterize, so consider using lumped element resistance, inductance, and capacitance to match. Since the HEMT device used in this design has a high single-tube gain, the two-stage amplifier can basically achieve the gain requirement. In the function definition of the two levels of the circuit, the first stage has the requirement of low noise as the maximum, while taking into account the gain and input matching, while the second stage mainly solves the gain and the output standing wave ratio. The lumped components are connected between the two stages to reduce losses and improve the stability of the circuit. The first and second stages use the same structure.

The circuit structure selected for this circuit is shown in the figure 3:

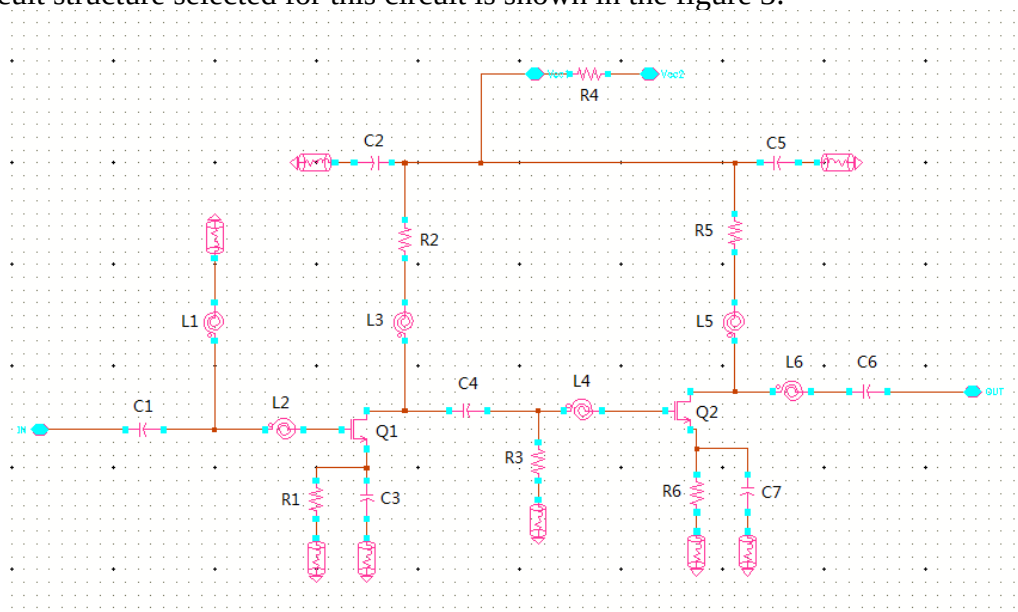

Figure 3 Circuit structure

5. Circuit design

Using the new configuration, a X-band microwave monolithic low-noise amplifer has been realized by 0.15um GaAs process. The simulation of our LNA have been presented based on the ADS2015. Over 8GHz~12GHz, power gain is above 20dB(Figure 4); the ripple variation of power gain is less than ±0.7dB; The noise figure is less than 1.2dB(Figure 5); The 1dB compression point is more than 10.5dBm(Figure 8); input return loss is lower than -15dB(Figure 6); output return loss is lower than -15dB(Figure 7); Current less than 40mA. the layout of the LNA with a chip size of 1.0*1.6 mm^2.

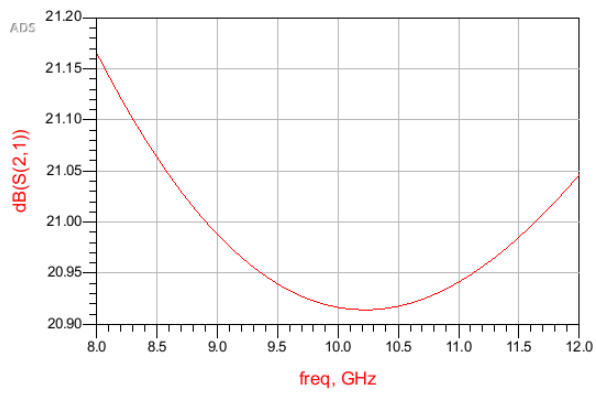

Figure 4 Simulated Power Gain

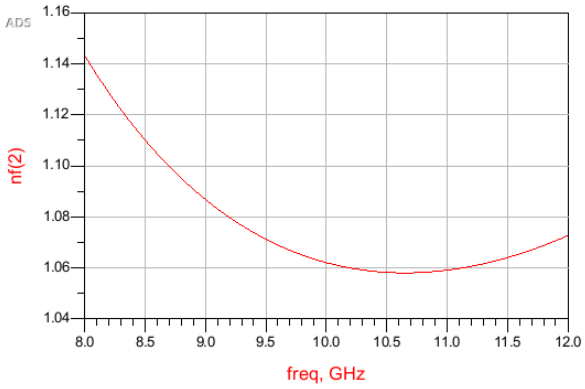

Figure5 Simulated Noise figure

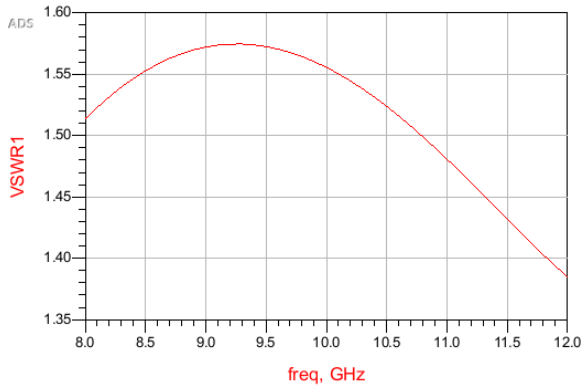

Figure 6 Simulated input VSWR

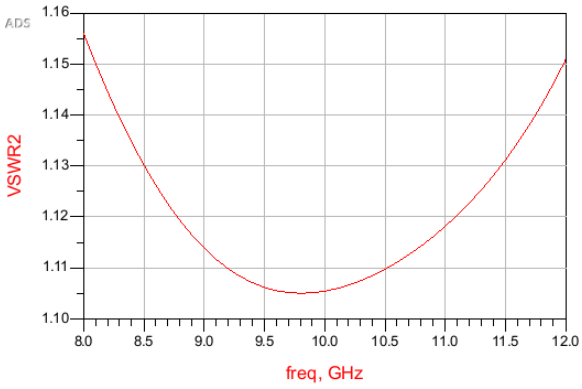

Figure7 Simulated ouput VSWR

freq	outpwr
0.0000 Hz	10.91 dBm
12.00 GHz	10.91 dBm
24.00 GHz	10.91 dBm
36.00 GHz	10.91 dBm
48.00 GHz	10.91 dBm
60.00 GHz	10.91 dBm

Figure8 Simulated Output 1 dB compression point

6. Conclusions

In this paper a suitable configuration is used for a X-band microwave monolithic low-noise amplifer. the sumulation results shows over 8GHz~12GHz, power gain is above 20dB; the ripple variation of power gain is less than ±0.7dB; The 1dB compression point is more than 10dBm; input return loss is lower than -15dB; output return loss is lower than -15dB; Current less than 40mA. the proposed one is good candidate for X-band microwave monolithic low-noise amplifer applications.

References

[1] Grant A. Ellis, Jeong-Sun Moon, Danny Wong, et al. "Wideband AlGaN/GaN HEMT MMIC Low Noise Amplifier", 2004 IEEE M T N Digest, Page(s): 153-156

[2] S. Cha, Y.H. Chung, m. Wojtowwicz, et al. "Wideband A1GaN/GaN HEMT MMIC Low Noise Amplifier for Highly Microwave Symposium Digest, IEEE MTT-S Survivable Receiver Electronics" [J],International, 2004, pp.829-832.

[3] Pengelly R. S., Turner J.A. Monolithic Broad GaAs FET Amplifier" [J] Electronics Letters, 1976,

Page(s): 251-252.

[4] Jonathan B Hacker, Joshua Bergman, et al. "An ULTRA-LOW Power InAs/AlSb HEMT Ka-band low-noise amplifier" [J], IEEE Microwave and Wireless Compound Letter, Vo1.14, No.4, April 2004, Page(s):156-158.

[5] William R. Deal, Michael Biedenbender, et al. "Design and Analysis of Broadband Dual-Gate Balanced Low-Noise Amplifier" [J], IEEE Journal of Solid-State Circuits, Vo1.42, No.42, No. 10, Oct. 2007, Pa} e(s):2107-2115.

[6] Zhang Zongnan, Huang Qinghua, Hao Mingli, et al. "Design of a 24-40 GHz balanced low noise amplifier using Lange couplers"[J], Journal of Semiconductors,Vo1.30, No. 4, April 2009.

[7] Parikh P, Wu Y, Moore M,LNA&receiver ICs" [J],et al. "High linearity, robust, A1GaN-GaN HEMTs for High Performance Devices 2002 Proceedings, IEEE Lester Eastman Conference on 6-8 Aug. 2002, Pages(s): 415-421.

[8] A. Bettidi, F. Corsaro, A. Cetronio, A. Nanni, et al. "X-Band GaN-HEMT LNA Performance versus Robustness Trade-Off' [J], Proceedings of the 4th European Microwave Integrated Circuits Conference, Sept. 2009, Page(s):439-442.

[9] Mingqi Chen, William Sutton, et al. "A 1-25 GHz GaN HEMT MMIC Low Noise Amplifier" [J], IEEE Microwave and Wireless Components Letters, Vo1.20, No. 10, October 2010, Page(s):563-565.

[10] S. Cha, Y.H. Chung, M. Wojtowicz, I. Smorchkova, B.R. Allen, J.M. Yang, R.Kagiwada. "Wideband AlGaN/GaN HEMT Low Noise Amplifier for Highly Survivable Receiver Electronics" [C], IEEE MTT-S International. Microwave Symposium Digest, 2004, page(s): 829-831.

[11] Grant A. Ellis, Jeong-Sun Moon, Danny Wong, et al."Wideband A1GaN/GaN HEMT MMIC Low Noise Amplifier", 2004 IEEE M T N Digest, Page(s):153-156.

[12] M. Micovic, A. Kurdoghlian, H. P. Moyer, et al. "GaN MMIC Technology for Microwave and Millimeter-wave Applications" [J], IEEE Semiconductor Integrated Circuit Symposium, 30 Oct.-2 Nov. 2005, Page(s):173-176.

[13] Parikh P, Wu Y, Moore M, et al. "High linearity, robust, A1GaN-GaN HEMTs for LNA&receiver ICs" [J], High Performance Devices 2002 Proceedings, IEEE Lester Eastman Conference on 6-8 Aug. 2002, Page(s):415-421