Advances in Social Science, Education and Humanities Research, volume 196

2nd International Conference on Social Science, Public Health and Education (SSPHE 2018)

The Flipped Classroom Approach in Calculus Teaching with Mathematics Software

Linghui Jin
City College
Wuhan University of Science and Technology
Wuhan, China
jinlinghui163@163.com

Abstract—Flipped classrooms are an instructional technology trend mostly incorporated in higher education settings. The purpose of this study was to determine the effect of the flipped classroom approach designed by using Mathematics software in calculus teaching. We use the double integral learning as an example to demonstrate our approach. Results indicated that the flipped classroom approach designed with using mathematics software will increase student achievement.

Keywords—Flipped Classroom Approach, Mathematics Software, Calculus Teaching, Double Integral

I. INTRODUCTION

A flipped classroom is an instructional strategy and a type of blended learning that reverses the traditional learning environment by delivering instructional content, often online, outside of the classroom. It moves activities, including those that may have traditionally been considered homework, into the classroom. In a flipped classroom, students watch online lectures, collaborate in online discussions, or carry out research at home while engaging in concepts in the classroom with the guidance of a mentor.

In the traditional model of classroom instruction, the teacher is typically the central focus of a lesson and the primary disseminator of information during the class period. The teacher responds to questions while students defer directly to the teacher for guidance and feedback. In a classroom with a traditional style of instruction, individual lessons may be focused on an explanation of content utilizing a lecture-style. Student engagement in the traditional model may be limited to activities in which students work independently or in small groups on an application task designed by the teacher. Class discussions are typically centered on the teacher, who controls the flow of the conversation [1].

In Calculus, algorithmically manipulating symbols is easier than understanding the underlying concepts and theory. Around 1680, Leibniz invented a symbol system for calculus that codifies and simplifies the essential elements of reasoning. The calculus of Leibniz allows modern students to easily achieve the results of the genius reasoning and methodology of Archimedes or Newton merely by manipulating symbols through simple notations. One can mechanically rely on the syntax of the notation without needing to think through the semantics [2]. Calculus education typically has a strong routine aspect, focusing on methods for differentiation and integration without justifying these methods, since current teaching practice barely has time to discuss the underlying concepts.

The work was supported by the major teaching and research project of City College, Wuhan University of Science and Technology (2016CYZDJY003).

Mathematics Software are very popular in modern mathematics teaching. For example, when the courses in the famous Khan Academy are examined, it is seen that some contents related to mathematics are enriched by using different software. There are numerous open source software programs which promote the design of such learning environments in mathematics teaching. Maxima [3], GeoGebra [4] are examples of such systems. Open source programs offer alternative contents to students and teachers for designing the learning environment.

In this article, we will investigating the use of mathematics software with a flipped classroom approach in calculus Teaching, we will use the double integral learning as an example to demonstrate our approach.

II. DOUBLE INTEGRAL

Integrals of a function of two variables over a region in R^2 are called double integral. Just as the definite integral of a positive function of one variable represents the area of the region between the graph of the function and the x-axis, the double integral of a positive function of two variables represents the volume of the region between the surface defined by the function (on the three-dimensional Cartesian plane where $z = f(x, y)$) and the plane which contains its domain [5]. Double integral as volume under a surface $z = f(x, y)$. The rectangular region at the bottom of the body is the domain of integration, while the surface is the graph of the two-variable function to be integrated (see Fig. 1).

The resolution of problems with multiple integrals consists, in most of cases, of finding a way to reduce the multiple integral to an iterated integral, a series of integrals of one variable, each being directly solvable. For continuous functions, this is justified by Fubini's theorem. Sometimes, it is possible to obtain the result of the integration by direct examination without any calculations.

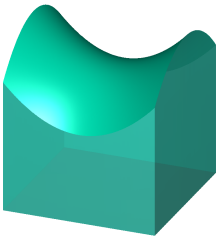

Fig. 1. The geometric meaning of double integral.

But unfortunately, It's very hard for most of students to calculate double integral. The traditional teaching method is difficult to change this phenomenon. So lots of scholars research how to utilize flipped classroom approach in calculus teaching, such as [6, 7].

III. The Proposed Method

Now, we think about a double integral problem as follows:

1. Is it possible to calculate the integral of a continuous function $f(x, y)$ on a rectangular domain in the x y plane and obtain different results depending on the order of integration? Explain your answer with your reasons. For the following integral:

$$\int_0^2 \int_{x^2}^{2x} (2x+1)dxdy \tag{1}$$

2. Draw the integration domain.

3. Write an equivalent integral by changing the order of integration.

We set up the research with two classes, there were 50 students in each class. The research study lasted five weeks. For the class A, we implemented the traditional teaching method to introduce the double integral. We carried out 4 course hours (4×45 min.) per week, teacher presented the definition, property and calculation method of the double integral in the class. When the series courses finished, only 21 students in class A can solve the problem above independently.

For the class B, In the first two weeks, students learned how to use GeoGebra and Maxima at a basic level. In the remaining three weeks, the topic of double integrals was taught using the flipped classroom approach. In the first two weeks, implementations were carried out in 4 course hours (4×45 min.), with two hours in class per week and in the last three weeks. Instruction lasted for a total of nine course hours (9×45min.), with three hours per week. The implementations were carried out in a total of 13 course hours (13×45min.). Students watched the double integral videos from the Khan Academy outside of the class for three weeks before coming to class.

The teacher played the role of a guide when students used the mathematics software and worksheets. We prepared three worksheets and four dynamic materials. The materials developed using mathematics software or by the students in the class were used with the worksheets. The worksheets were designed to provide opportunities for students to build and use materials. A sample of the materials used in the lesson is given in Fig. 2.

Here, using a slider, students were asked to change the n values. As the n value increased, they were asked to explain the relation between the volume of the solid obtained with the Riemann sum. An example of a material obtained with the increase of n-value is given in Fig. 3.

During the lesson taught using the flipped classroom approach, informal cooperative activities were conducted in stages when students used mathematics software using the worksheets. Spontaneous group discussions and the think-pair-share technique were used in the informal discussions. The teacher asked students at various times during the lesson what mathematics concepts mean, why something works and how a mathematics problem may be solved in a spontaneous group discussion. This group discussion was used during the first week. In the second and third weeks, the teacher used the think-pair-share strategy. The students paired with another student within their teams. The teacher posed questions using the mathematics software and worksheets to the class. The students were required to think of an answer on their own, then to pair with their partners to concur on a solution. In the end, the teacher asked students to share their answers or thoughts with the class [8]. Thus, students were expected to come to the lesson prepared with Khan Academy materials and under the guidance of the teacher students had more opportunity to focus on and discuss the topic of double integrals. Through the Khan Academy, students preliminary understanding of the definition and property of the double integrals, but how to calculate the double integrals is still hard for them. At this time, teacher will help them to make clear the problem and guide them how to use the mathematics software calculate the double integrals.

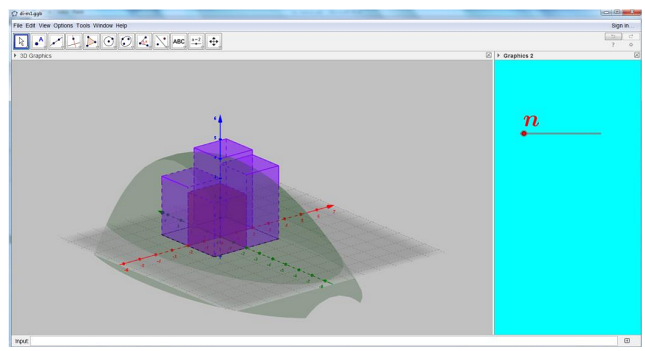

Fig. 2. A Dynamic material about approximating solids with rectangular boxes

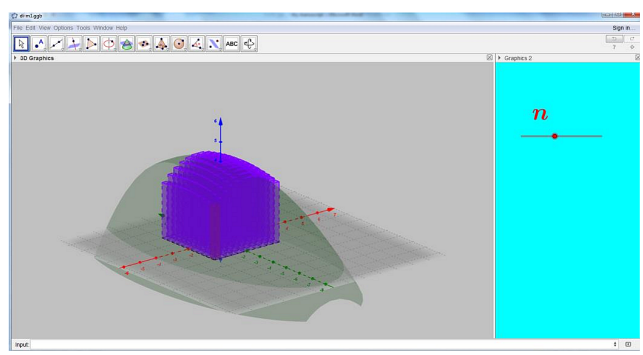

Fig. 3. The With the increase of n-value, the Riemann sum approximations approach the total volume of the solid

When the series courses finished, 38 students in class B solved the problem. Most of the students stated that the flipped classroom approach enabled them to understand the subject better. One of students indicated:

"Regarding the preparedness level, we come to the class in a much better way and we watch the subjects which we are going to study via computer on videos and then we study them in the

class. This has a positive effect on my learning. I noticed that I comprehended much better."

The reason why students understood the concepts much better with the flipped classroom approach designed using the mathematics software is that this approach provides more visuals in mathematics courses and students are prepared before coming to the class. there are two views supporting this opinion can be given as examples:

"When subjects are supported with visuals, they became more understandable. I could construct the examples much more easily with my logic..." "I believe that this model has been very helpful for us to come to the lessons prepared. Because it enhances the level of our prior knowledge, it enables us to learn more clearly and permanently..."

A total of 60% of the students stated that the approach promoted visualization and retention of knowledge. The following views of two students can be given as examples:

"As it is supported with visuals, it is remembered easily and it moves us away from memorization." "As we see visuals, they are remembered easily and I do not forget what I see. I am so lucky about this issue. It enables me to remember easily. I understood double integral very well and I will never forget it."

As many as 53% of the students stated that they understood the concepts much more easily with this approach. The following views of two students can be given as examples:

"Before the implementation, I was so scared. After the implementation, I understood that the subject was easy…I will do it with inner peace." "Thanks to this model, we understood that those subjects which are difficult to comprehend like double integral would be apprehended more easily."

IV. Conclusions

The flipped classroom approach designed using the mathematics software provided students with the opportunity to study calculus in a visual and concrete learning environment. Students who came to the class were prepared to take the opportunity to study calculus in a concrete environment using static concepts in a dynamic and visual environment with the support of the mathematics software. Thus, the difficult calculus topics are taught in a simpler way. Comparing the teaching effect of the class A and class B in our research, we can make the conclusion that the flipped classroom approach supported with mathematics software enabled students to understand calculus concepts much better and more easily and thus students' achievement increased. Although this approach made positive contributions, but it still has some shortage. e. g. some students had difficulties due to their failure to use a computer and software. Therefore, it is considered that the implementation of this approach in the classroom setting becomes a disadvantage for students who do not know how to use a computer. As a matter of fact, the flipped classroom approach can use in the other branch of math [9, 10], Hence, further research is needed in mathematics educators, to more fully contribute to the instructional decision making being undertaken on college campuses today related to the use of flipped classroom environments.

Acknowledgments

The author thank the co-editor and associate editor. The work was supported by the major teaching and research project of City College, Wuhan University of Science and Technology (2016CYZDJY003).

References

[1] Ryback, D., and Sanders, J. "Humanistic versus traditional teaching styles and student satisfaction," Journal of Humanistic Psychology, vol. 20, no. 87, pp. 87-90, 1980.

[2] Stewart, James, "Calculus: Early Transcendentals (6th ed.)," Brooks Cole Cengage Learning, 2008.

[3] Gaertne, B., "The Computer algebra program maxima," A Tutorial. Retrieved from http://maxima.sourceforge.net/docs/tutorial/en/gaertner-tutorial-revision/Contents.htm. 2005.

[4] Hohenwarter, M., and Fuchs, K., "Combination of dynamic geometry, algebra and calculus in the software system GeoGebra," Computer Algebra Systems and Dynamic Geometry Systems in Mathematics Teaching Conference, Pecs, Hungary, July 2004..

[5] Stroup, W., "Understanding Qualitative Calculus: A Structural Synthesis of Learning Research," International Journal of Computers for Mathematical Learning, vol. 7, no. 2, pp. 167-215, 2002.

[6] Zengin, Yilmaz, "Investigating the Use of the Khan Academy and Mathematics Software with a Flipped Classroom Approach in Mathematics Teaching," Educational Technology & Society, vol. 20, no. 2, pp. 89-100, 2017.

[7] Muir T, and Geiger V., "The affordances of using a flipped classroom approach in the teaching of mathematics: a case study of a grade 10 mathematics class," Mathematics Education Research Journal, vol. 28, no. 1, pp. 1-23, 2016.

[8] Slavin, R. E., "Cooperative learning theory, research, and practice (2nd ed.)," Needham Heights, MA: Allyn and Bacon, 1995.

[9] Love, B., Hodge, A., Grandgenett, N., and Swift, A. W., "Student learning and perceptions in a flipped linear algebra course," International Journal of Mathematical Education in Science & Technology, vol. 45, no. 3, pp. 317-324, 2014.

[10] Ozdamli, Fezile, and Asiksoy, Gulsum, "Flipped classroom approach," World Journal on Educational Technology Current Issues, vol. 8, no. 2, pp. 98, 2016.