ATLANTIS PRESS
*Atlantis Highlights in Engineering (AHE), volume 2*
International Conference on Industrial Enterprise and System Engineering (IcoIESE 2018)

# *Extending the UTAUT Model to Understand the Citizens' Acceptance and Use of Electronic Government in Developing Country*

## *A Structural Equation Modeling Approach*

Deden Witarsyah Jacob
Department of Information Systems,
Faculty of Industrial Engineering, Telkom University,
Bandung, Indonesia
dedenw@telkomuniversity.ac.id

Irfan Darmawan
Department of Information Systems,
Faculty of Industrial Engineering, Telkom University,
Bandung, Indonesia
irfandarmawan@telkomuniversity.ac.id

***Abstract*—The rapid development of information and communication technologies had a positive impact on the government to provide better and efficient services to the community. Despite some criticisms of electronic government services (e-gov), its utilization has continued to improve. The citizens need to be placed as customers at the center of the development and provision of public services. User satisfaction may indeed have the decisive influence in adopting and using e-gov services. This research modifies unified theory of acceptance and use of technology (UTAUT) model to improve user satisfaction and provide a solution for governments and to rethink the strategy for presenting a better model. A quantitative study has been conducted to describe the model and formulate sufficient indicators to measure user satisfaction. Furthermore, the measurement model was tested using the data from the questionnaire. Structural equation modeling (SEM) was applied to discover the goodness of fit underlying models and indicators. Based on the results, we find that privacy and performance expectancy showed positive performance effects on the intention to use e-gov services. Finally, the results of this study are also expected to be an input for stakeholders for the development of e-gov in the future.**

***Keywords; e-government; UTAUT; SEM; PLS; Public Services; Adoption***

## I. INTRODUCTION

The ICT (Information and Communication Technology) development has brought a significant impact on human life. Changes in the various fields, which originally used traditional methods and then turned into ICT-based services, also occur in the public service sectors managed by the government [1]–[3]. ICT scout service in government or refers to electronic government can be done for 24 hours, anytime and anywhere without having to meet directly with the officer. This, of course, provides convenience for people who need certain services quickly without having to waste time and increase effectiveness, efficiency [4] and convenience [5], especially at the transaction level [6]. Online tax services are interesting example of the e-government service application, which is a form of government service for citizens (G2C and G2B). Several interesting examples of e-gov services in developing countries are also found by some researchers [4][5]. In Bangladesh, the government proposes to change traditional administrative systems and practices. It also shows how e-gov has provided inspiration and solutions to address some complex challenges. Meanwhile, a scholar who did the study about e-gov adoption in Oman indicated that e-gov service providers may segment population on the basis of age and education level [6], and suggested to separate focused marketing strategies can be developed using age groups and education levels for realizing enhanced results.

Some scholars studied about an impact of trust in e-gov adopting, where trust has become an element success factors [17]. Furthermore, trust in government institutions is a perception based on integrity and the ability of government agencies to provide services including the structure and regulations of the institutions.

Given the important role and participation of people in this technology, it is essential to maintain its utilization and sustainability, then understand what factors influence the acceptance and use of e-gov. Therefore, this research examines the acceptance and use of e-gov by the community based on the theory unified theory of acceptance and use of technology (UTAUT) [7-8]. Furthermore, this research examined the determinants of the adoption and usage of e-gov in Indonesia. Hopefully, the result of this study could contribute to the literature of the UTAUT in the context of developing country.

The systematic organization of the paper is Section 1 explains about introduction; Section 2 covers the review of the literature; Section 3 justifies the research design and methodology, Section 4 describes the result and finding; Section 5 discusses the result and their implications; Section 6 states the conclusion.

## II. LITERATURE REVIEW

### A. Acceptance of Information Technology

Nair et al. found that technology and its accompanying advances have a very important role in changing the direction and outlook of the community in various fields including health and the economy [9]. Rising of the use of technology in the past two decades are considered to have a substantial increase in the development of new and different approaches to government that has created a global impact. Therefore, practitioners and researchers need to have a better understanding of the rules of use of information technology to think through of evaluating technology and to predict the reactions of usinf information technology can be used [10].

### B. Factors Influencing e-Government Adoption

Today, all countries in the world are massively promoting the use of e-gov to improve service to society and reduce bureaucracy. The potential of e-gov services makes scientists interested in exploring intensively the factors that influence e-gov adoption. However, many opinions suggest that e-gov adoption among the community is still not satisfactory [2], [3].

### C. (UTAUT) Unified Theory of Acceptance and Use of Technology

UTAUT was created by Venkatesh et al, which aims to explain the intention of users in using information technology and usage behavior. The UTAUT model is an integrated model that consists of eight theoretical models such as Technology Adoption Model (TAM), Theory of Planned Behavior (TPB), Theory of Reasoned Action (TRA), Motivational Model (MM), Combined TAM and TPB (C-TAM-TPB), PC Utilization, Innovation Diffusion Theory (IDT), and Social Cognitive Theory [9]. Meanwhile, Yfantis et. al., explored the influential factors of the e-gov adoption by improving the unified theory of acceptance and use of technology model [11]. The improved UTAUT model derives from the additional elements of trust, the context of use and human development index. The improved UTAUT also contributes to the current research such as virtual learning environment, electronic banking, and electronic library [12].

### D. Structural equation modeling (SEM)

Structural Equation Modeling (SEM) is a method that is formed due to a problem exists in which a variable cannot be measured directly. These non-measurable variables are named as latent variables which require a manifest variable as an indicator or measure of the latent variable. In its development, SEM is a popular method because it can be applied to several analysis, such as causal modeling analysis, confirmation analysis, second-order factor analysis, regression models analysis, covariance structure models analysis and correlation structure models analysis [16].

There are several methods of estimation on SEM method, namely Instrument Variable (IV), Two Stage Least Square (TSLS), Unweighted Least Square (ULS), Generalize Least Square (GLS), Maximum Likelihood (ML), Weighted Least Square (WLS) And Diagonally Weighted Least Square (DWLS). However, these SEM estimation methods have disadvantages that is requiring large samples and data to be normally distributed. Therefore, an alternative method to estimate SEM was developed to overcome the deficiencies in other methods, namely the Partial Least Square (PLS) method.

## III. RESEARCH DESIGN AND METHODOLOGY

The research design is illustrated in fig. 1 to portray the citizens adoption. This section also described the methodology and corresponding hypotheses of the constructs.

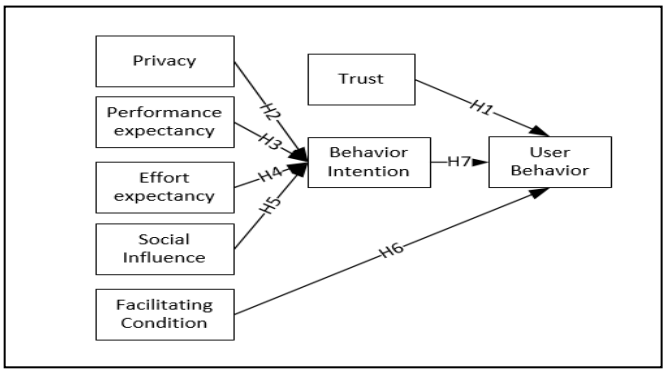


Fig. 1. Research Model

Performance expectancy, social influence facilitating conditions and effort expectancy are significant factors of user acceptance. Furthermore, the influences of trust and privacy used in some of the prior research contexts included in field of information systems such as mobile money [3], digital libraries, social media usage behavior [2], economic and social interactions requires the government to interfere in people's private affairs, auditing for election privacy via, and information privacy research in e-gov.

Based on the conceptual model, variables such as privacy, performance expectancy, effort expectancy, social influence will be tested for influence on behavior intention. Furthermore, facilitating condition, trust and behavior intention will be tested for influence on user behavior. The relationship between variables has been tested by Structural Equation Modeling. The results will show the variables that affect the acceptance of e-gov services.

A person usually has concerns about privacy (PV) and misuse of information when using an electronic channel, so in this study, it is assumed that positive privacy is correlated. Based on the description, the research hypothesis is proposed as follows: H1. Privacy has a positive influence on trust in using e-gov services.

Previous research has identified the lack of public trust (TR) as one of the major obstacles to e-gov implementation. This research further emphasizes that trusts have an impact on the intention to use e-govt and influence user behavior. Based on the description, the research hypothesis is proposed as follows: H2. Trust has a positive influence on user behavior in using e-gov.

Performance Expectancy (PE) is defined as the level of individual belief when using the system will help to achieve the job performance [9]. Meanwhile, behavior intention is

defined as the intent of the user using the system continuously assuming they have access to information. Based on the these description, the research hypothesis is proposed as follows: H3. Performance expectancy has a positive influence on behavior intention in using e-gov services.

Effort expectancy (EE) is a level in using the system that can reduce the energy and time in doing his job [9]. Effort expectancy is measured by perceptions of ease of use of e-gov services, as well as the ease of learning using this service. Based on the these descriptions, the research hypothesis is proposed as follows: H4. Effort Expectancy has a positive influence on behavior intentions in using e-gov.

Social Influence (SI) refers to the social pressure coming from external environment which surrounds the individuals and may affect their perceptions and behaviors of engaging in a certain action such as the opinions of friends, relatives, and superiors. Previous research has shown that people who use an innovation can influence other people's acceptance decisions because of the belief that innovation will improve one's social status and reputation. Based on the above description, the research hypothesis is proposed as follows: H5. Social Influence has a positive influence on behavior intentions in using e-gov.

Facilitating Condition (FC) is a belief in the existence of organizational and technical facilities that support user activities. Facilitating conditions are measured by perceptions to access the required resources, as well as to acquire the knowledge and support required to use e-gov. It is also influenced by the perception that technology itself is compatible with the user lifestyle [9]. Based on the description, the research hypothesis is proposed as follows: H6. Facilitating condition has a positive influence on the user behavior in using e-gov.

Use behavior (UB) is defined as the intensity or frequency of users in using information technology. Researchers previously suggested that a person's behavior is an expression of a person's desire or interest [2], where the desire is influenced by social factors, and feelings. An information technology is considered to be good or bad depending on what the user feels after using it. Based on the description, the research hypothesis is proposed as follows: H7. Behavior intentions to use e-gov have a positive effect on the behavior of e-gov use.

A pilot test was performed at the beginning of the study to check the reliability of the instruments. By testing the questionnaire, we can ensure the respondent's understand each statement. Generally, the test of questionnaires using samples in small quantities ranged from 15 to 30 respondents. In this study, the questionnaire test was conducted on 20 respondents. In this study, the questionnaire having 35 items. These items were constructed by current literature.

## IV. RESULT AND FINDING

### A. Demographic data

The data showed that most e-gov users in Bandung are women, with the age of 20-30 years and they have used e-gov for almost three years (Table I). Although e-gov has existed for more than ten years' enthusiastic citizens in using this technology is still very low.

TABLE I. CHARACTERISTICS OF RESPONDENT TABLE

| Demographics | Category | Sample | |
|---|---|---|---|
| | | N | % |
| **Gender** | Male | 95 | 48 |
| | Female | 105 | 52 |
| **Age** | <20 | 14 | 7 |
| | 20-30 | 86 | 43 |
| | 31-40 | 71 | 35,5 |
| | >40 | 29 | 14,5 |
| **Usage experience** | Less than 1 year | 25 | 12,5 |
| | 1-3 years | 94 | 47 |
| | 4-6 years | 81 | 40,5 |

### B. Descriptive analysis, validity and reliability tests

Partial Least Square (PLS) was chosen as an alternative method of estimating the model using Structural Equation Modeling (SEM). The PLS can solve the limitations of SEM such as requiring large data, no missing values, must be normally distributed, and should not have multicollinearity. PLS uses distribution approach where data can be certainly distributed. In addition, PLS can also be used on small sample quantities.

TABLE II. CHARACTERISTICS OF RESPONDENT ABLE

| Construct | Items | Standardized factor loading | AVE | CR | Cronbach Alpha |
|---|---|---|---|---|---|
| **BI** | BI1 | 0,809 | 0,778 | 0,913 | 0,855 |
| | BI2 | 0,894 | | | |
| | BI3 | 0,937 | | | |
| **EE** | EE1 | 0,570 | 0,590 | 0,876 | 0,823 |
| | EE2 | 0,797 | | | |
| | EE6 | 0,811 | | | |
| | EE7 | 0,805 | | | |
| | EE8 | 0,827 | | | |
| **FC** | FC1 | 0,551 | 0,449 | 0,850 | 0,803 |
| | FC2 | 0,650 | | | |
| | FC3 | 0,775 | | | |
| | FC4 | 0,752 | | | |
| | FC5 | 0,655 | | | |
| | FC6 | 0,603 | | | |
| | FC7 | 0,680 | | | |
| **PE** | PE1 | 0,647 | 0,495 | 0,830 | 0,752 |
| | PE4 | 0,670 | | | |
| | PE5 | 0,721 | | | |
| | PE6 | 0,754 | | | |
| | PE7 | 0,720 | | | |
| **PV** | PV1 | 0,973 | 0,948 | 0,973 | 0,945 |
| | PV2 | 0,974 | | | |
| **SI** | SI1 | 0,596 | 0,677 | 0,798 | 0,764 |
| | SI2 | 1,000 | | | |
| **TR** | TR1 | 0,738 | 0,676 | 0,862 | 0,776 |
| | TR2 | 0,842 | | | |
| | TR3 | 0,880 | | | |
| **UB** | UB1 | 0,812 | 0,778 | 0,913 | 0,855 |
| | UB2 | 0,894 | | | |
| | UB3 | 0,934 | | | |

Based on table II, convergent validity was achieved for each construct where loadings factor more than 0.5. Meanwhile, the convergent and discriminant validity (AVE) was also achieved which was more than 0.4 where the range is from 0.4 to 0.94. This indicates acceptable cross-loadings results.

### C. *Structural model analysis*

Model fit was achieved after running the analysis (R2 > 0.1, ranging from 0.3 to 1). Based on the significance values of the path coefficients (t-value >1.96), five of the seven hypotheses were not supported (see Fig. 1).

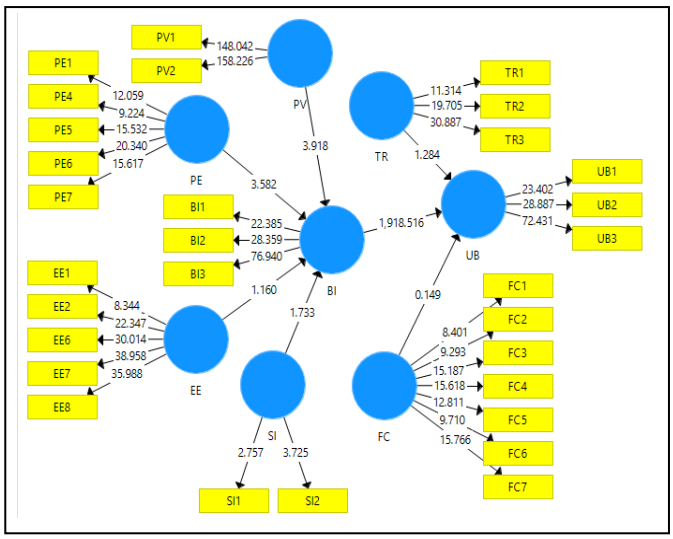


Fig. 2. Structural model results

The most significant relationship was found between the privacy in e-gov and the behavior intention. Then, it is followed by performance expectancy and behavior. However, the results also showed that trust and user behavior, the effort expectancy and the behavior intention, the social influence and the behavior intention, the facilitating condition and the user behavior, The behavior intention and the user behavior does not moderate (see Tables III and IV). The implications are further discussed in the next section

TABLE III. STRUCTURAL MODEL FIT INDICES

| Dependent variables | $R^2$ |
|---|---|
| Behavior Intention | 0.3 |
| User Behavior | 1 |

TABLE IV. PLS ANALYSIS RESULT

| Hypothesis | Relationships of variables | *t*-statistic | Result |
|---|---|---|---|
| H1 | TR=>UB | 1.284 | Not Supported |
| H2 | PV=>BI | 3.918 | Supported |
| H3 | PE=>BI | 3,582 | Supported |
| H4 | EE=>BI | 1.160 | Not Supported |
| H5 | SI=>BI | 1.733 | Not Supported |
| H6 | FC=>UB | 0.149 | Not Supported |
| H7 | BI=>UB | 1.918 | Not Supported |

## V. DISCUSSION AND IMPLICATION

The results of this study indicate that privacy and Performance Expectancy (PE) have a significant impact on perceptions in using e-gov. Today's users use e-gov systems with respect to technology, structure, and regulations, making users feel safe to utilize the system as expected. Furthermore, users also trust the ability and privacy of the technology to perform their transactions. This means the user can strongly trust government initiatives in providing online services to the public [13]-[16].

Based on Table IV, the statistical value t is 3.582, so it can be concluded that PE has significant effect to behavior intention. This is in line with previous research conducted by Venkatesh et al. This means that PE is a powerful factor that affects a person in acceptance of new technology and is also strongly related to preferences and experiences.

Surprisingly, we found that TR, EE, SI, and FC did not have any impacts. This means that these constructs are not important factors that influence UB and, consequently, technology adoption and use. Furthermore, our findings can be very valuable for practitioners, such as local government to pay attention in developing e-gov service. Finally, a full understanding of these impacts the above dimensions can have will influence the adoption of e-gov services and will drive the citizen in using the technology.

## VI. CONCLUSION

Our research aimed to understand some light on the adoption factors associated with e-gov service. We used the UTAUT model combined with the collaboration theory to explored the factors behind e-gov adoption in developing country such as Indonesia. Following Venkatesh, we found that privacy and performance expectancy had a positive effect on intention to use e-gov service. Our study is useful for the government that is implementing e-gov service or trying to understand potential factors in e-gov adoption. Finally, we can conclude that our findings are mainly consistent with previous studies, but we also uncovered some surprising results.

## REFERENCES

[1] C. Barhoumi, "User acceptance of the e-information service as information resource," *New Libr. World*, vol. 117, no. 9/10, pp. 626–643, 2016.

[2] R. Rauniar, G. Rawski, J. Yang, and B. Johnson, "Technology acceptance model (TAM) and social media usage: An empirical study on Facebook," *J. Enterp. Inf. Manag.*, vol. 27, no. 1, pp. 6–30, 2014.

[3] S. Chauhan, "Acceptance of mobile money by poor citizens of India: integrating trust into the technology acceptance model," *Info*, vol. 17, no. 3, pp. 58–68, 2015.

[4]. S. K. Sharma, H. Al-Shihi, and S. M. Govindaluri, "Exploring quality of e-Government services in Oman," *Educ. Bus. Soc. Contemp. Middle East. Issues*, vol. 6, no. 2, pp. 87–100, 2013.

[5] L. Waller and A. Genius, "Barriers to transforming government in Jamaica," *Transform. Gov. People, Process Policy*, vol. 9, no. 4, pp. 480–497, 2015.

[6] S. K. Sharma, "Adoption of e-government services," *Transform. Gov. People, Process Policy*, vol. 9, no. 2, pp. 207–222, 2015.

[7] Q. A. Brian, C. Victor, O. Gekara, Q. Al-mamari, and B. Corbitt, "E-government adoption in Oman : motivating factors from a government perspective," *Transform. Gov. People, Process Policy*, vol. 7, no. 2, pp.

199–224, 2013.

[8] V. Venkatesh, M. G. Morris, G. B. Davis, and F. D. Davis, "User Acceptance of Information Technology: Toward a Unified View," *Source MIS Q.*, vol. 27, no. 3, pp. 425–478, 2003.

[9] Nair, F. Ali, and L. C. Leong, "Factors affecting acceptance & use of ReWIND," Interact. Technol. Smart Educ., vol. 12, no. 3, pp. 183–201, 2015.

[10] V. Yfantis, K. Vassilopoulou, A. Pateli, and A. Usoro, "The Influential Factors of M-Government ' s Adoption," in *MobiWIS 2013*, 2013, pp. 157–171.

[11] F. Zhao, J. Wallis, and M. Singh, "Internet Research E-government development and the digital economy: a reciprocal relationship For Authors E-government development and the digital economy: a reciprocal relationship," *Internet Res. Internet Res. Iss Internet Res.*, vol. 25, no. 4, pp. 734–766, 2015.

[12] Lee, J., Kim, H. J., & Ahn, M. J. (2011). The willingness of e-government service adoption by business users: The role of offline service quality and trust in technology. Government Information Quarterly, 28(2), 222–230.

[13] Deden Witarsyah,Teddy Sjafrizal,Mohd Farhan MD Fudzee and Mohamad Aizi Salamat,"The Critical Factors Affecting e-Government Adoption in Indonesia: A Conceptual Framework," *International Journal on Advanced Science, Engineering and Information Technology*, vol. 7, no. 1, pp. 160-167, 2017. [Online]. Available: http://dx.doi.org/10.18517/ijaseit.7.1.1614.

[14] Jacob D.W., Fudzee M.F.M., Salamat M.A., Saedudin R., Abdullah Z., Herawan T. (2017) Mining Significant Association Rules from on Information and System Quality of Indonesian E-Government Dataset. In: Herawan T., Ghazali R., Nawi N., Deris M. (eds) Recent Advances on Soft Computing and Data Mining. SCDM 2016. Advances in Intelligent Systems and Computing, vol 549. Springer, Cham.

[15] Jacob D.W., Fudzee M.F.M., Salamat M.A., Saedudin R.R., Yanto I.T.R., Herawan T. (2017) An Application of Rough Set Theory for Clustering Performance Expectancy of Indonesian e-Government Dataset. In: Herawan T., Ghazali R., Nawi N., Deris M. (eds) Recent Advances on Soft Computing and Data Mining. SCDM 2016. Advances in Intelligent Systems and Computing, vol 549. Springer, Cham.

[16] D. W. Jacob, M. F. Md Fudzee, M. A. Salamat, S. Kasim, H. Mahdin, and A. A. Ramli, "Modelling End-User of Electronic-Government Service: The Role of Information quality, System Quality and Trust," *IOP Conf. Ser. Mater. Sci. Eng.*, vol. 226, p. 12096, Aug. 2017.