Design and Simulation of Fuzzy-PID DC Governor System Based on Mine Hoist

Yanxiang Wu[1,a], Chaojun Zhang[2,b], Haibo Huo[3,c] and Chaoqun Zhou[4,d]

[1,2,3,4]College of Engineering, Shanghai Ocean University, No.999, Hu cheng huan Road, Lin gang new city, Shanghai 201306, China

[a]yxwu@shou.edu.cn, [b]zcj2554@163.com, [c]yjjoy3912@163.com, [d]chaoqunonline@163.com

Keywords: Mine hoist, Fuzzy-PID, DC governor, MATLAB

Abstract. According to the requirement of smooth operation and accurate positioning for DC speed regulating system of mine hoist, a new speed control system that based on double closed-loop of Fuzzy-PID was designed. The best control scheme for mine hoist was also validated by simulation comparison with conventional PID control system in the MATLAB/Simulink. The result showed that the proposal was feasible and had practical value.

Introduction

With the continuous development of modern industry, the dual-loop speed control system based on the DC motor is widely used in the field of modern industrial control. As an important mechanical lifting equipment in modern industrial production, mine hoist [1] bears many tasks, such as transportation of personnel, material and equipment, etc. In the DC closed-loop speed control system of mine hoist, the current regulator and speed regulator usually uses the conventional PID, because of the advantages of simple structure, high control precision and easy engineering realization. However, due to the non-linear and changeable structural parameters of the DC motor, the tuning parameters of conventional PID controller are often difficult to achieve optimal state. And combined with the PID control method which can not often do both in system speed and stability, thus it is unable to obtain satisfactory dynamic performance. Fuzzy control can not rely on the accurate mathematical model of the controlled object and can be applied to the nonlinear, time-varying complex objects, as well as multi-variable system, breaking the limitations of the PID method, and have a good dynamic and static response of the control system. But fuzzy control systems exists a larger shortcoming—low steady precision, which greatly influences its practical application in the transmission system.

In this article on the basis of the analysis of DC governing control of mine hoist, combining the advantages that fuzzy control does not need to establish accurate mathematical model, good robustness and conventional PID control have a high steady precision, and a new control system for the mine hoist that based on double closed-loop of Fuzzy-PID is designed. In addition, the simulation and analysis of the new system model is made by using MATLAB/Simulink.

DC Double-loop Control System of Mine Hoist

Mine hoist plays a very important role in the field of modern industry, and it ensures the safe, reliable, efficient operation directly related to production status and economic benefits of the enterprises. Double closed-loop DC speed system [2] is widely used in engineering applications, and the basic structure of which is based on a current loop for the inner ring and a speed ring for the outer ring. According to the structure of double closed-loop DC speed-regulating system, the outer loop of speed plays a decisive role in the whole control system; the inner loop of current mainly plays the role of change motor operating characteristics to facilitate the control speed loop. Therefore, in designing the structure model of the control system, the outer loop of speed uses Fuzzy-PID controller and the inner loop of current uses the conventional PID controller. The structure is shown in Fig.1. The speed regulator and current regulator realize cascade connection, and by speed adjustor driving current regulator, and by the current regulator to control the trigger circuit of power electronic converter, which triggers SCR to control rotating speed of motor.

Published by Atlantis Press, Paris, France.
© the authors, 2013

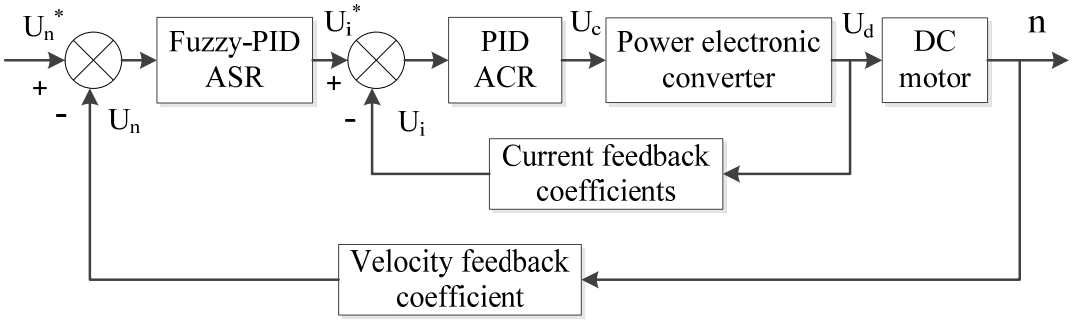

Fig.1 The structure of double closed-loop DC speed system

The Conventional PID Controller

The PID controller [3] is widely applied in the control system, and the mathematical model of the time domain can be expressed as differential equations EP.1. Among them, *u(t)*, *e(t)* is respectively represented as the controller input, output; K_P, T_I, T_D is respectively represented as proportional coefficient, the number of integration time and derivative time constant.

$$u(t) = K_p\left[e(t) + \frac{1}{T_I}\int_0^t e(t)dt + T_D\frac{de(t)}{d(t)}\right] \tag{1}$$

Computer control is a sampled-data control, which can calculate the control amount according to the deviation of the sampling moment. Using difference equation to discrete FP.1 and can be obtained as follow EP.2. In the equation, K_i is the integral coefficient and $K_i=K_PT/T_I$; K_d is the differential coefficient and $K_d=K_pT_D/T$; T is the sampling period; *de(k)* is the rate of deviation.

$$u(k) = Kp\left\{e(k) + \frac{T}{T_I}\sum_{i=1}^{k} e(i) + \frac{T_D}{T}[e(k) - e(k-1)]\right\}$$
$$= Kpe(k) + K_i\sum_{i=1}^{k} e(i) + K_d\, de(k) \tag{2}$$

By adjusting the PID controller parameters, the system can achieve less precision DC motor speed control, but it can not meet the requirements of high performance speed control. Because it is a linear control which based on the known object and parameters unchanged. Moreover, for the tuning of the control parameters, it primarily depends on the engineering experience. So it is difficult to obtain the optimal value of the parameters and makes the system show poor adaptability and robustness.

Design of Fuzzy-PID Controller

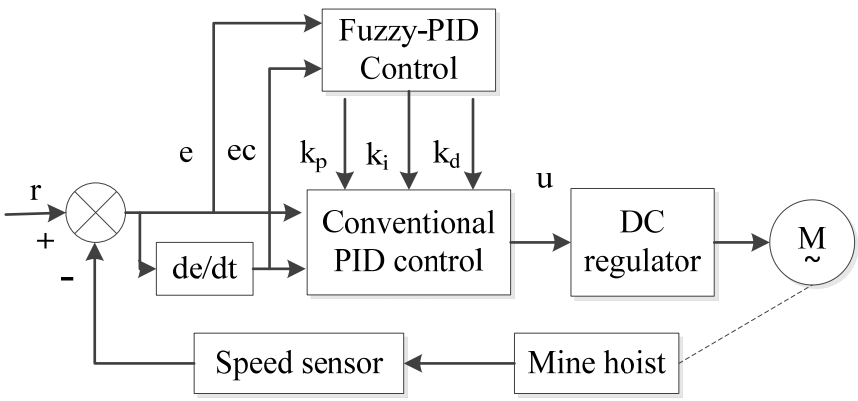

Fig.2 The structure of Fuzzy-PID control system

As a parameters self-tuning control system, Fuzzy-PID control which based on the fuzzy rules makes a real-time adjustment of PID parameters. Here the error *e* and error rate of change *ec* between the actual running speed of mine hoist and the given speed serves as the input of the fuzzy controller

© the authors, 2013

schemes, and PID controller parameters k_p, k_i, k_d serve as the output of fuzzy controller. The structure is shown in Fig.2.

Establishment of Fuzzy Rule

Combined with practical engineering, 2D Mamdani [4] fuzzy controller is fittingly used in this paper, and setting input variable *e*, *ec* and output variable k_p, k_i, k_d, whose fuzzy subset is {NB, NM, NS, ZO, PS, PM, PB}, which stands for {Negatively Big, Negatively Medium, Negatively Small, Zero, Positively Small, Positively Medium, Positively Big}, and the domain is quantified in [-3,3]. Using fuzzy control Toolbox in MATLAB, a membership function of each variable can be obtained. Taking into account the extent of coverage on the domain, sensitivity, stability and robustness, the membership function of "Z" type and "S" type is used on the left and right of the field respectively; the membership function of triangular type is applied in the rest field, as shown in Fig.3. On the domain the output curve of k_p, k_i, k_d is shown in Fig.4 respectively.

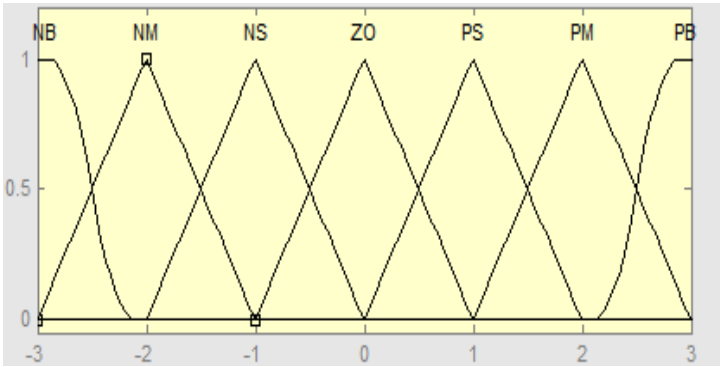

Fig.3 Membership function of variable

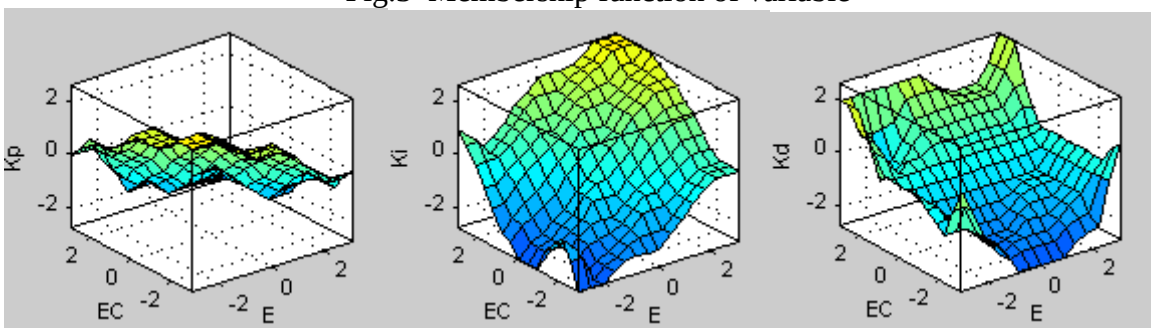

Fig.4 The output curve of k_p, k_i, k_d

According to engineering experience, the rule table [5,6] of fuzzy control is established and shown in Table 1. Based on the fuzzy rule table, applying of synthesis algorithm of fuzzy reasoning, the real-time value of PID parameter should be respectively calculated as follows: EP.3, EP.4 and EP.5. ΔK_p, ΔK_i, ΔK_d is respectively represented as the output modifier value of fuzzy controller, and K_p, K_i, K_d is respectively represented as the initial value of PID controller. And the real-time adjustment of PID parameters value online, which can guarantee the running of mine hoist in the given speed and improve the stability performance of the system.

$$K_p' = K_p + \Delta K_p \quad (3)$$

$$K_i' = K_i + \Delta K_i \quad (4)$$

$$K_d' = K_d + \Delta K_d, \quad (5)$$

Table 1. The rule table of fuzzy control

e \ ec	NB	NM	NS	ZO	PS	PM	PB
NB	PB,NB,PS	PB,NB,NS	PM,NM,NB	PM,NM,NS	PS,NS,NB	ZO,ZO,NM	ZO,ZO,PS

© the authors, 2013

NM	PB,NB,PS	PM,NB,NS	PM,NM,NB	PM,NS,NM	PS,NS,NM	ZO,ZO,NS	NS,ZO,ZO
NS	PM,NM,PM	PM,NM,NS	PM,NS,NM	PS,NS,NM	ZO,ZO,NS	NS,PS,NS	NS ,PS,ZO
ZO	PM,NM,ZO	PS,NM,NS	PS,NS,NS	ZO,ZO,NS	NS,PS,NS	NM,PM,NS	NM,PM,ZO
PS	PS,NM,ZO	PS,NS,ZO	ZO,ZO,ZO	NS ,PS,ZO	NM,PS,ZO	NM,PM,ZO	NM,PB,ZO
PM	PS,ZO,PB	ZO,ZO,NS	NS ,PS,PS	NM,PS,PS	NM,PM,PS	NM,PB,PS	NB,PB,PB
PB	ZO,ZO,PB	ZO,ZO,PM	NM,PS,PM	NM,PM,PM	NM,PM,PS	NB,PN,PS	NB,PB,PB

Design Model and Simulation

Using MATLAB/Simulink [7] tools, this paper makes a simulation experiment about the speed control effect of the Fuzzy-PID control in the DC control system, compared with the conventional PID control. The simulation model of Fuzzy-PID controller established by Simulink/Fuzzy Logic Toolbox is shown as in Fig.5.

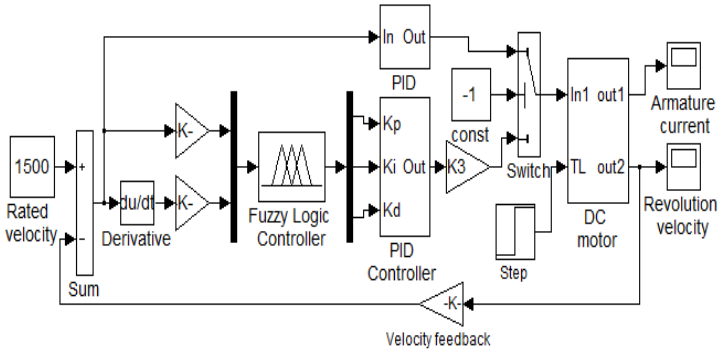

Fig.5 Fuzzy-PID controller

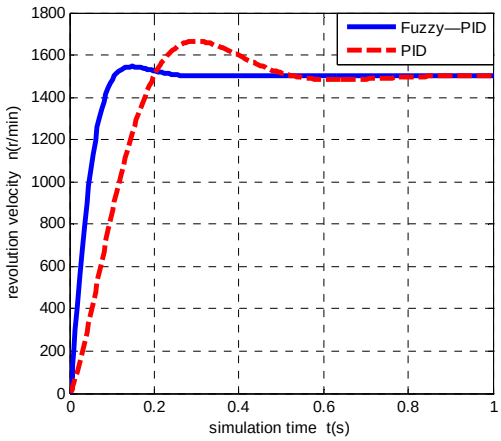

Fig.6 The simulation curve of speed response

Two controllers are designed in the simulation model. One is the Fuzzy-PID controller and the other is a conventional PID controller. Through constant module (const) and switch module (switch), two controllers can be converted in different time. In the case of controlling the same loads, the rated speed of the motor is n_N=1500r/min, and the simulation curves which are obtained about the speed response of Fuzzy-PID control and conventional PID control are shown in Fig.6. As can be seen from the simulation curve, Fuzzy-PID controller can effectively suppress overshoot than the conventional PID controller. It has fast response and high accuracy control and can acquire a good stable performance.

Summary

The Fuzzy-PID controller is designed for the DC control system of mine hoist, combining the advantages of the fuzzy controller and PID controller. It not only can overcome the effect of the parameter changes and nonlinearity of controlled object, but also can obtain good dynamic performance, and enhance operation stability of the system, and effectively reduce the impact of transmission systems, and extend the service life of hoist. The control system can be used as a kind of simple and practical technical schemes, achieving stable and highly efficient operation of hoist, and has broad application prospects and promotion value.

© the authors, 2013

Acknowledgements

This work was financially supported by Nature Science Foundation of Shanghai (No.12ZR1413100) and Research Foundation for Graduate Student of Shanghai Ocean University.

References

[1] Sun Lijun. Based on research on Adaptive fuzzy PID controller of mine hoist [J]. Journal of Shanxi Datong University: Natural Science Edition, 2012, 282(2) : 63-66.

[2] Ruan Yi, Chen Weijun. Motion Control System [M]. Tsinghua university press, 2006.

[3] Feng Yaqiong, Wang Xin. Application of Neural Network Adaptive PI Controller in Active Power Filter [J]. Power System Protection And Control, 2011, 39(16) :75-79.

[4] Shi Xinmin, Hao Zhengqing. Fuzzy Control and MATLAB Simulation [M]. Tsinghua university press, 2008.

[5] Gao Bing, Li Peng, Zhang Xue, et al. Airplane Automatic Landing System Based on Adaptive Fuzzy ControI [J]. Electric Driver, 2011, 41(8) : 24-27.

[6] Li Bing, Feng Min, Wang Hongbo. Design and Implementation of The Fuzzy PID Level Control System [J]. Journal of Hefei University of Technology: Natural Science Edition, 2006, 29(11) : 1370-1374.

[7] Li Guoyong. Intelligent Predictive Control and MATLAB Implementation [M]. Electronic Industry Press, 2010.

© the authors, 2013