The Intermediary Role of Integrating Resource Capacity on Global Industry Chain Embeddness and Radical Innovation: The Study of China's High-tech Industry

Gao Wei[1], Liu Jia[2], Liu Xielin[1]

[1]School of management, University of Chinese academy of sciences
[2]School of the Earth Sciences and Resources, China University of Geosciences (Beijing)
(Subsidized by National Natural Science Foundation of China No.70932001)

Abstract

Radical innovation is very important to Chinese enterprises. The influences of embeddness on radical innovation, this paper constructs the conceptual model about the influence of the embeddness of global industrial chain on Chinese enterprises' radical innovation. Empirical study is conducted via questionnaire survey of 242 enterprises. The study shows that the resource integrating capacity of the global industrial chain includes three dimensions: technology, suppliers and market. It's also proved that the improvement of integrating capacities of technology and market resources will effectively promote radical innovation performance. Moreover, the embedding degree and embedding quality exert positive influence on the resource integrating capacity of global industrial chain, and the influence is realized through the intermediary medium. The enlightenment for management is obtained, with several suggestions for enhancing management put forward. Based on the conclusion, the paper also proposes the research prospect in the future.

Keyword: radical innovation, global industry chain, Embeddness

1. Introduction

Radical innovation is featured with high uncertainty in technology, markets, the emergence of opportunities, etc. And there are significant differences between radical innovation and incremental innovation in terms of technical track, organizational structure, and the involvement of the core firms in realizing the innovation target. It is difficult for an individual firm to predict the technological needs in the process of innovation, so they need more support from the industry chain to make radical innovation (Ron Adner, 2006)[1].

The development of industry need to meet the conditions of the factors of production, related and supporting industries, market demand and corporate strategy(Porter,1990)[2], while China does not have any of the four conditions (Liu Xielin et. al, 2012)[3], so only through the integration of the global industry chain(GIC) resources can the Chinese companies make up for the missing elements to the development of China's high-tech industry, and also gain a com-

petitive advantage in terms of technology, resources, market through the channels of learning, economies of scale and economies of scope(Jarillo, 1988)[4]. Therefore, there is a great strategic significance for enterprises in China's high-tech industries to achieve radical innovation to integrate the GIC resources.

2. Theory and hypothesis

Radical innovation is the novel, unique, or state of core technological advance in a product category that significantly alters the consumption patterns in a market (Abernathy and Utterback, 1978[5]; Gatignon et al., 2002[6]). In recent years, an increasing number of scholars have been paying attention to the relationship between radical innovations and the industry chain. Adner (2006[1], 2010[7]) argued that the challenges from upstream and downstream exert different influences on core enterprises in flat photocopying equipment manufacturing industry. DeCusatis (2008)[8] illustrates how to integrate an innovative team in the upstream and downstream enterprises to achieve radical innovation through a case study. But there are still some problems in this area. Frist, the objects selected by the researchers are the technologies leading the enterprises in developed countries, while the enterprises from developing countries are neglected. Second, there is lack of systematic analysis about the factors that affect radical innovation in the industry chain. Third, the existing theories cannot explain the mechanism about how the factors from industry chain influence the behavior of enterprises in radical innovation.

2.1 Global industry chain embeddness and radical innovation

2.1.1 Embedding degree and radical innovation

Some scholars believe that the high-strength chain is helpful to promote the innovation performance in enterprises' innovation action (Uzzi, 1996[9]; Bengtsson &Solvell 2004[10]). While some researchers think the low-strength chain is helpful to the innovaton （Håkansson & Snehota 1998)[11]. Some scholars (Uzzi, 1997[12]; Rowley et, al., 2000[13]) argued that the relationship between embedding degree and innovation performance is just like a "Inverted U" shape.

Above all, the opinions of the scholars are different about the influence of embedding strength on innovation performance. Compare with the companies in developed countries, the technical capacity of Chinese companies are not good enough to make radical innovation, so it is necessary to embed in GIC to get new knowledge and technology to improve innovation capacity. Thus,

Hypothesis 1：The higher of embedding degree of Chinese firm is, the better radical innovation performance it would be.

2.1.2 Industry chain Embedding Quality and Radical Innovation

The quality of relationship consists of such three dimensions as the trust among knowledge-network partners, the sharing of knowledge and information among partners, and problem solving through interaction and cooperation. (Gulati, 1999)[14].

The intra-organizational trust is the key factor for cooperative innovation and successful relationship (Kanter, 1994[15]). The mutual trust in a knowledge network is helpful for more effective integrated use of external resources, and the enterprise would be more willing to open wider to their partners (Dore, 1983)[16].

The high-level information sharing extent in the external knowledge network, be it disruptive or incremental, is beneficial for enterprise innovation (Uzzi, 1999[17]; Adams, Day &Dougherty,

1998[18]). The higher the level of sharing among partners is, the lower the cost for them to get more accurate and latest information from more extensive channels. Solving problems together is a kind of responsibility sharing between enterprises (Heide & Miner, 1992)[19], and a behavior of adaptive adjustment in aim of jointly combating difficulties with each other as well as maintaining good cooperative relations in the cooperation process (Gulati & Sytch, 2007)[20]. It promotes mutual coordination between partners to find solutions to problems that occur in the process of cooperation, increase efficiency, lower the rate of error in production, shorten the product R&D period, and upgrade technological innovation level of enterprises (Uzzi, 1997)[12]. We suggest that:

Hypothesis 2: The higher of embedding quality of Chinese firm is, the better radical innovation performance it would be.

2.2 Integrating Resource Capacity from GIC and Radical Innovation

An enterprising cannot maintain sustainable competitive advantage only by possessing valuable, scarce, inimitable and irreplaceable resources (Barney & Arikan, 2001)[21]. In order to realize value creation, an enterprise also has to be able to select, integrate and use various external and internal resources by means of quick response to market demand fluctuations (Sirmon& Hitt, 2003)[22], or rather, to have the capacity of high efficient resource integration. Integration of the industry chain is of great importance for enterprises in terms of strategic development. It enables the acquisition of competitive advantages in technology, resources and market through knowledge learning, scale economy, scope economy, etc. (Jarillo, 1988)[23].

2.2.1 Integrating Technology Ability

With the increase of complexity of new technology and the rising trend of intersection and merge of different subjects and technology fields, the close cooperation between enterprises is becoming more and more necessary (Hamel, 199[24]; Poyago –Theotoky, 1995[25]). An enterprise, despite of its large scale and diversified technical skills, cannot command all capabilities in all fields of related technologies. Such reality would become the bottleneck restricting enterprises from engaging in significant technology innovation activities.

The resource integration of industry chain based on technology R&D offers complementary knowledge and sufficient resources to the core enterprise, lowers the cost and avoid unknown risks. All these are favorable for both incremental and radical innovations. Above that, we come up with the following hypothesis:

Hypothesis 3: The higher the integrating technology capacity from the industry chain is, the better the performance of radical innovation of the enterprise would be.

2.2.2 Integrating Suppliers Ability

In the product R&D process, the core enterprise need to incorporate the upstream and downstream enterprises in the innovation system to ensure all spare parts to meet the needs of new product innovation. In many cases involving the upstream suppliers, manufacturers require suppliers to improve their product components or ordered subsystems (Clark, 1989[26]; Liker et al., 1996[27]). When manufacturers encourage suppliers to improve their parts, or when the supplier's products cannot meet their expectations, they can force the supplier to change through its advantageous bargaining power (Helper, 1996[28]; Sakakibara, 1997[29]). Therefore, the supplier will feel heavy pressure for innovation, and such pressure will eventually drive the supplier to pay more attention on innovation. Thus,

Hypothesis 4：The higher the integrating suppliers capacity from the industry chain is, the better the performance of radical innovation of the enterprise would be.

2.2.3 Integrating Market Ability

The upstream and downstream enterprises participate in cooperative innovation not only out of sharing of technologies, but also in aim of expanding the market share. New areas in this regard include expanding the scope of products, developing new products to enter the new market, achieving the market globalization, influencing the market structure, reducing competition, raising the competitive status, etc. (Hagedoorn, Sehakenraad, 1994)[30]. Radical innovation is featured with brand new capital form and sales channels (Christensen, 1997)[31]. To enterprises in developing countries, it's unaffordable to carry out large-scale construction, which turns out to be low efficient. This requires extensive search and integration of external resources in the market and incorporation of these resources into the existing organization structures. Thus,

Hypothesis 5：The higher the integrating suppliers capacity from the industry chain is, the better the performance of radical innovation of the enterprise would be.

2.3 The Influence of Embedding on Integrating Resource Capacity

2.3.1 Embedding Degree & Integrating Resource Capacity

Studies show that the extent of intimate relations could strengthen mutual trust and cooperation between enterprises, and promote smooth information and tacit knowledge transfer between the enterprise and the external partners, thus lowering the cost for search of information (Gulati, Nohria, Zaheer, 2000)[32]. It's very helpful for enterprises to obtain more low-redundancy information such as new concept of operation, new market news, new market opportunities, etc., through extensive contacts with upstream and downstream manufacturers and enlarging of the partner network. Besides, the enterprise could also quickly discover the chance for resource combination and soon adjust its existing product structure and industry orientation to firstly benefit from the market.

The impact of embedding degree of industry chain to resource integration capacity is similar to its impact on radical innovation. Therefore, we put forward the following hypothesis:

Hypothesis 6a：The higher the embedding degree of GIC is, the higher the integrating technology capacity of the enterprise would be.

Hypothesis 6b：The higher the embedding degree of GIC is, the higher the integrating suppliers capacity of the enterprise would be.

Hypothesis 6c：The higher the embedding degree of GIC is, the higher the integrating market capacity of the enterprise would be.

2.3.2 Embedding Quality & Resource Integration Capacity

Higher embedding quality is beneficial for enterprises to coordinate various resources and information in the market (Granovetter, 1985)[33]. The efforts in establishing good relations and mutual trust with others would accelerate information transfer, stimulate teamwork, directly promote the organization performance (Uzzi, 1997)[12] and reduce management cost (Lavie, 2007)[34]. The close relations between enterprises and suppliers would contribute to information sharing, which helps lower the storage costs for raw materials and inventory, shorten production cycle, reduce the production cost and avoid inventory shortage (Arshinder et. al., 2007)[35].

In the cooperative relations, the partners all hope they establish specific long-term relations on the basis of mutual trust (Liker et al., 1996[27]). It means the manufacturer will generally sign a long-term contract with the supplier to win their trust, or the manufacture would exert more influence on the supplier in the spare parts design stage to maximize their potential of innovation. Even if there's no guarantee of extra return from the manufacturer, such influence would definitely encourage high R&D input by the supplier in producing a specific part.

In conclusion, the in-depth and high quality embedding industry chain would promote positive influence on core enterprise's technology R&D and market expansion, and supplier's innovation, which further enhances the industry chain resource integration capacity of the enterprise. We suppose the following the hypothesis based on that:

Hypothesis 7a：The higher the embedding quality of GIC is, the higher the integrating technology capacity of the enterprise would be.

Hypothesis 7b：The higher the embedding quality of GIC is, the higher the integrating suppliers capacity of the enterprise would be.

Hypothesis 7c：The higher the embedding quality of GIC is, the higher the integrating market capacity of the enterprise would be.

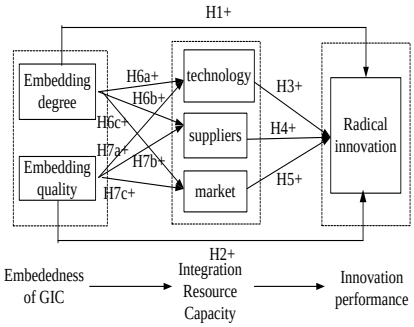

Fig2-1 The theoretical model

3. Research Method

3.1 Data collection and research process

We asked the local Science and Technology Departments for help to collect questionnaires, and selected 403 high-tech companies which all meet the following conditions: located at the middle of the industry chain with its own suppliers, customers, international partners, and independent R&D institutions. In the end, we collected 365 valid questionnaires.

Though the samples are mostly from the eastern provinces, they are still representative samples of high-tech industry in the fields of energy saving and environmental protection, new generation of information technology, biotechnology, high-end equipment manufacturing, new energy, new materials, new energy vehicles and so on. And the international partners come from the United States, Japan, Britain, Germany, France, Hong Kong, India and Taiwan（table3-1）.

Table3-1 Description of the sample

	Jiangsu	Hebei	Beijing	Tianjin	Shanghai	Hubei	Others
energy saving and environmental protection	8	7	4	0	6	1	3
information technology	16	10	20	3	12	5	10
biotechnology	3	3	8	3	3	0	6
equipment manufactureing	26	11	1	6	0	7	18
new energy	`13	5	14	2	4	1	2
new materials	8	1	4	2	6	3	5
motor industry	19	9	8	5	8	4	15
Pharmacy	6	4	4	3	2	3	4
others	8	3	3	4	1	10	1

3.2 Measuring development

We prepared the questionnaire in English, and had two independent translators translate it into Chinese, following a back-translation process. To ensure content and face validity, we conducted five in-depth interviews with

senior marketing managers who had at least three years' business experience in high technology sectors. In accordance with their responses, we revised a few questionnaire items to enhance clarity. We then conducted a pretest with 20 senior managers, and finalized the instrument based on their feedback. The final survey was conducted in Chinese.

3.3 Variables

The variables of this study are the embedding degree, embedding quality, capacity of integrating resource from GIC and radical innovation performance. Since most of the above variables are difficult to be measured objectively, this study used a five-point Likert Scale scoring to measure. The digital score 1-5 stand for the attitude from strongly disagree to strongly agree, 3 represents the neutral attitude or middle state. The items, reliability and validity of the questionnaire shows in appendix 1.

With different definitions of radical innovation, the ways of measuring are different. We adopted a measure of *radical innovation* from Chandy and Tellis (1998) [36], which reflects the degree of technological advances and performance revenue involved in radical innovation.

Measuring the *capacity of resource integration from GIC* and *embeddness of GIC* is totally new for this study, so we have to ask the existed documents for help to draw up the questionnaire which includes technology, suppliers and market three factors.

Embeddness of GIC contains two factors, *embedding degree* and *embedding quality*. And there are some scholars who measure the *embedding degree* only by the frequency of contact among the enterprises (Lin et.al. 2009[37]), which is also used in this study. The *embedding quality* measure is relatively mature and consistent. Yli-Renko (2001)[38] measured the embedding quality with keeping their promises, not damaging each other's interests with the principle of reciprocity and not taking advantage of the enterprise's weakness to obtain improper benefits. Uzzi (1997)[12] found that the connotation of embedding quality contained trust, high-quality information sharing and joint problem solving.

4. Assessment of the model

4.1 Fitting results measurement model

Structural equation model (SEM) which integrates the multiple regression, path analysis and confirmatory factor analysis is a useful data analysis tool. We received 384 valid questionnaires. All of them had passed the reliability and validity test, so the data is reliable to build the SEM model. There are three types of goodness of fit index: they are absolute goodness of fitindex(χ^2, χ^2/df, goodness of fit index, AGFI), incremental goodness of fit index (Tucker-Lewis coefficient, CFI) and Approximate error index (RMSEA). We selected five of them (x2/df, RMSEA, GFI, TLI and CFI) as the goodness of fit index to evaluate the structural model.

Based on the conceptual model and the theory hypotheses previously proposed, we built the initial structure model (figure4-1). Table 4-1 is the analysis result through AMOS16.0 software. From Table 4-1 we can see that all the indexes are satisfied the statistics requirements.

We can find the verified hypothesizes which are H3, H5, H6a, H6b, H6c, H7a, H7b, H7c from table4-3 and H1, H2, H4 are not verified. So the model needs revision.

Table4-1 Regression coefficient of Variables

Path	`Estimate	P	Hypothesis	Path	`Estimate	P	Hypothesis
Rad<---emq	.080	.492	H1	Sup<---emd	.021	.027*	H6b
Rad<---emd	.009	.329	H2	Mar<---emd	.054	***	H6c
Rad<---tec	.566	***	H3	Mar<---emq	.552	***	H7a
Rad<---sup	-.004	.957	H4	Sup<---emq	.701	***	H7b
Rad<---mar	.157	.008**	H5	Tec<---emq	.675	***	H7c
Tec<---emd	.025	.005**	H6a				
χ^2	559.5	Df	314	Goodness of fit index(GFI)			0.902
RMSEA	.046	χ^2/df	1.782	Fit index (CFI)			0.943
Normed fit index (NFI),		0.881		Tucker-Lewis coefficient(TLI)			0.937

*** p<0.001, ** p<0.01, * p<0.05; Rad=Radical Innovation, Tec= Integrating technology capacity, Sup= Integrating suppliers capacity, Mar= Integrating market capacity, emd= Embedding degree, emq= Embedding quality

Table4-2 Revised regression coefficient of variables

Path	`Esti-mate	P	Hypothesis	Path	`Estimate	P	Hypothesis
Rad<---tec	.644	***	H3	Sup<---emd	.021	.026*	H6c
Rad<---mar	.197	***	H5	Tec<---emq	.675	***	H7a
Tec<---emd	.026	.003**	H6a	Mar<---emq	.551	***	H7b
Mar<---emd	.054	***	H6b	Sup<---emq	.702	***	H7c
χ^2	559.746	Df	315	goodness of fit index(GFI)			0.902
RMSEA	.046	χ^2/df	1.777	fit index (CFI)			0.944
normed fit index (NFI),			0.881	Tucker-Lewis coefficient(TLI)			0.937

*** p<0.001, ** p<0.01, * p<0.05; Rad=Radical Innovation, Tec= Integrating technology capacity, Sup= Integrating suppliers capacity, Mar= Integrating market capacity, emd= Embedding degree, emq= Embedding quality

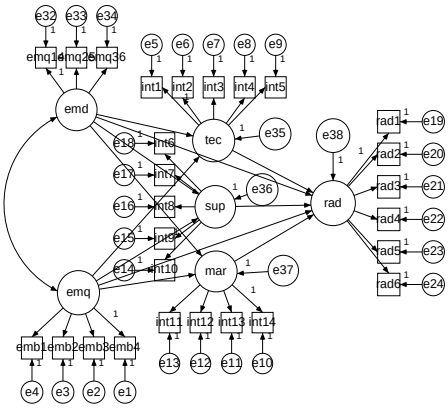

Fig4 -1 The initial structural equation model

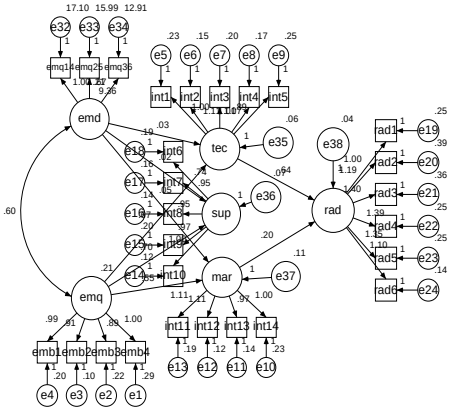

Fig4-2 The ideal structural equation model

4.2 Model Amendment

From table4-2 we can see that the regression coefficients of which are from embedding degree to radical innovation performance, embedding quality to radical innovation performance and the capability of integrating suppliers resource from GIC to radical innovation performance are not significant. The significant levels are 0.492, 0.329 and 0.957. After deleting these paths we get figure4-2. The indicators reached an acceptable level and got improved after revision (table4-3).

Hypothesis 3 has been verified through statistical analysis, and the capability to integrate GIC's technical resource has direct influence on radical innovation. With the upgrading of the integrating technology ability from GIC, the radical innovation performance of enterprises will become better. Hypothesis 5 is supported by the empirical analysis, and the Integrating market capacity from GIC has direct influence on radical innovation.

With the upgrading of the ability to integrate resource of the market from GIC, the radical innovation performance of enterprises will become better. Hypothesis 4 is not supported by the empirical analysis, the regression coefficients of the capability to integrate resource of the suppliers from GIC to radical innovation is not significant. Hypothesis 6a, hypothesis 6b and hypothesis 6c are all supported by the empirical analysis, the embedding degree has a direct influence on the ability to integrate resources from GIC. That is, with the degree of embeddness improvement, the ability of the enterprises to integrate technology, markets and suppliers from GIC getting improvement. Hypothesis 7a, hypothesis 7b and hypothesis 7c are all supported by the empirical analysis, the embedding quality has direct influence on the ability to integrate resources from GIC. That is, with the improvement of embedding quality, the ability of the enterprises to integrate technology, markets and suppliers from GIC also gets improved.

For hypothesis 1 and hypothesis 2, the regression coefficients are not significant, so there is no direct influence relationship between embeddness and radical innovation performance. That is to say, it is impossible to improve the radical innovation performance only by improving the embedding degree and quality. The influence on the radical innovation performance caused by the change of embeddness may contain more complicated mechanism. From figure we can see the ability of integration by which the embeddness exerts influence on radical innovation performance is the mediating variable in the model.

5. Conclusions and Implications

Frist, it is beneficial for Chinese enterprises to radical innovation to integrate global industry chain resources initiatively. Chinese enterprises can't improve their radical innovation performance through integrating the resource from the upstream of technology suppliers and the downstream of pattern's market. For one thing, By the way of introduction, mergers and acquisitions, the enterprise can merge the technology from suppliers into its own technology system, so it can add the technology gap quickly to achieve radical innovation. On the other hand, collaborative innovation among enterprises in the industry chain will enable enterprises to obtain the complementary knowledge and technology, the advantages of technology portfolio and the technology synergies. As the result of this study, integrating global supplier Resources to make collaborative innovation cannot improve the radical innovations performance. That is maybe Chinese enterprises generally lack the influence to affect global suppliers to innovate around them.

Secondly, the embeddness in GIC is helpful for Chinese enterprises to integrate the global industry chain resources. The higher the embedding degree and quality is, the better the enterprise will integrate the global industry chain resources. With the development of information technology and the acceleration of the globalization trend, geographical restrictions have been weakened in certain industrial development. So embedding in the GIC can solve the problem of lack of senior production factors to develop high-tech industry, and it can also search for related and supporting industries to format innovation ecosystem, get in touch with the leading users, avoid competition in the domestic counterparts, and then to improve the capability of integrating the global resources.

Thirdly, in the process of innovation, the influence of embeddness in GIC on radical innovation performance is not direct, but through the capability of integrating resources of the GIC. Enterprises can enhance the capability of integrating industry chain resources by embedding in the GIC, and then improve the radical innovation ability. There is a dispute about the relationship between embeddness and innovation, and we find that the reason why there is a dispute is because the path from embeddness to radical innovation is not direct. Instead, the global resource integration capacity plays an intermediary role. So the enterprise can't get the innovation capability improved simply by embedding in GIC which would lead to low-end locking. To be more competitive, the enterprises should promote their capability to integrate resources from GIC.

There are some limitations about the paper. First, the samples are mostly concentrated in the eastern coastal provinces, and the geographic limitations might disturb the study results, so it is needed to expand the sample range to be more representative in the future. Second, there are few radical innovations in China in the strict sense, so we adopted the degree of radical innovation to measure radical innovation. Although we have made concrete expatiations on it, it may still influence the result due to deviations in subjective understanding. Third, there's no discussion on the mechanism about how to format the capacity of integrating GIC resources which would be the further research directions.

6. References

[1] R. Adner, "Match your innovation strategy to your innovation ecosystem," *Harvard Business Review,* 84, 4, pp. 98-107, 2006.

[2] ME. Porter, "The Competitive Advantage of Notions," *Harvard Business Review*, 1990.

[3] XL. Liu, W. gao, P. Lv, P. Cheng," The development mode of China's strategic emerging industry: in the view of photovoltaic industry," S*cience of Science and Management of S&T*, 33, 1, pp.116-125, 2012.

[4] JC.Jarillo, "On Strategic Networks," *Strategic Management Journal*, 9, 1, pp.31-41, 1988.

[5] WJ. Abernathy, JM. Utterback, "Patterns of industrial innovation," *Technology Review*, 80, 7, pp.40-47, 1978.

[6] H. Gatignon, ML. Tushman, W. Smith, "A structural approach to assessing innovation: Construct development of innovation locus, type, and characteristics," *Management Science* 48, 9, pp.1103-1122, 2002.

[7] R. Adner, R. Kapoor, "Value creation in innovation ecosystems: how the structure of technological interdependence affects firm performance in new technology generations," *Strategic Management Journal*, 31, pp.306-333, 2010.

[8] C. DeCusatis, "Creating, growing and sustaining efficient innovation

teams," Creativity and Innovation Management, 17, 2, pp.155-164, 2008.

[9] B. Uzzi, "The source and consequences of embeddedness for the economic Performance of organizations: The network effect," *Ameriean sociologieal Review*, 61, 4, pp.674-698,1996.

[10] M. Bengtsson, Ö. Sölvell, "Climate of competition, clusters and innovative performance," *Scandinavian Journal of Management*, 20, 3, pp.225-244, 2004.

[11] H. Håkansson, I. Snehota, "The burden of relationships or who's next. In Network Dynamics in International Marketing", *Naude P, Turnbull PW (eds). Pergamon: Oxford*, pp.16-25, 1998.

[12] B. Uzzi, "Social structure and competition in interfirm networks: the Paradox of embeddedness," *Administrative science Quarterly*, pp. 35-42, 1997.

[13] T. Rowley, D. Behlens, D. Krackhardt, "Redundant governance struCtures: Ananalysis of structural and relational embeddedness in the steel and semiconductor industries," *Strategic Management Journal*, 21, pp.369-386, 2000.

[14] R. Gulati, "Network Loeation and Learning: The Influence of Network Resources and Firm Capabilities on Alliance Formation," *Strategic Management Journal*, 20, pp.397-420, 1999.

[15] RM. Kanter, "Collaborative advantage," *Harvard Business Review*, 72, 4, pp.96-108, 1994.

[16] R. Dore, "Goodwill and the spirit of market capitalism," *The British Journal of Sociology*, 34, 4, pp.459-482, 1983.

[17] B. Uzzi, "Embeddedness in the making of financial capital: How social relations and networks benefit firms seeking financing," *American Sociological Review*, 64, pp.481-505. 1999.

[18] ME. Adams, GS. Day, D. Dougherty, "Enhancing new product development Performance: an organizational learning Perspective," *Journal of Product Innovation Management*, 15, 5, pp.403-422, 1998.

[19] JB. Heide, AS. Miner, "The shadow of the future: Effects of anticipated interaction and frequency of contacts on buyer-seller cooperation," *Academy of Management Journal*, 35, pp.265-291, 1992.

[20] R.Gulati, M. Syteh, "Dependence AsyTnmetry and Joint Dependence in Interorganizational Relationships: Effeets of Embeddedness on a Manufacturer's Performance in Procurement Relationships," *Administrative Science Quarterly*, 52, pp.32-69, 2007.

[21] JB. Barney, AM. Arikan "The resource-based view: Origins and implications," In M. A. Hitt, R. E. Freeman, &J. S. Harrison (Eds.), *Handbook of strategic management Oxford: Blackwell*, 2001.

[22] DG. Sirmon, MA. Hitt, "Managing resources: Linking unique resources, management and wealth creation in family firms," *Entrepreneurship Theory and Practice*, 27, 4, pp.339-358, 2003.

[23] JC. Jarillo, "On Strategic Networks," *Strategic Management Journal*, 9, 1, pp.31-41, 1988.

[24] G. Hamel, "Competition for competence and inter-Partner learning within intemational strategic alliances," *Strategic Management Joumal*, 12, pp.83-103, 1991.

[25] JA. Poyago-Theotoky "Equilibrium and optimal size of a research joint venture in an oligopoly with spillovers," *Journal of Industrial Economics*, 43, pp.209-226, 1995.

[26] KB. Clark, “Project scope and project performance: the effect of parts strategy and supplier involvement on product development,” *Management Science*, 35, 10, pp.1247-1263, 1989.
[27] JK. Liker, RR. Kamath, S. NazliWasti, M. Nagamachi, “Involving suppliers in product development in the United States and Japan: Evidence for set-based concurrent engineering,” *Research Policy*, 25, 1, pp.59-89, 1996.
[28] S. Helper, “Suppliers and product development in the early American automobile industry,” *Business and Economic History*, 25, 2, pp.39-51, 1996.
[29] S. Sakakibara, BB. Flynn, RG. Schroeder, WT. Morris, “The Impact of Just-in-Time Manufacturing and Its Infrastructure on Manufacturing Performance,” *Management Science*, 4, 9, pp.1246-1257, 1997.
[30] J. Hagedoorn, J. Sehakenraad, “The effeet of strategic technology alliances on company performance,” *Strategic management Jamal*, 15, pp.291-309, 1994.
[31] CM. Christensen, “The innovator's dilemma: when new technologies cause great firms to fail,” *Harvard Business School Press*, 1997.
[32] R. Gulati, N. Nohria, A. Zaheer, “Guest editors’ introduction to the special issue: strategic networks,” *Strategic Management Journal*, 21, 3, pp.199–201, 2000.
[33] Granovetter M. “The strength of weak ties,” *American Journal of Sociology*, 78, 6, pp. 1360-1380, 1973.
[34] Lavie D. “Alliance portfolios and firm performance: A study of value creation and appropriation in the US software industry,” *Strategic Management Journal*, 28, 12, pp.1187-1212, 2007.
[35] Arshinder A K, Deshmukh S G. “Coordination in supply chains: an evaluation using fuzzy logic,” *Production Planning & Control*, 18, 5, pp.420-435, 2007.
[36] RK. Chandy, GJ. Tellis, “Organizing for Radical Product Innovation: The Overlooked Role of Willingness to Cannibalize,” *Journal of Marketing Research*, 35, 4, pp.474-487, 1998.
[37] N. Lin, WM. Ensel, “Vaughn JC. Social Resources and strength of Ties: Structural Factors in Occupational Status Attainment,” *American Sociological Review*, 46, 4, pp.393-405, 1981.
[38] H. Yli-Renko, E. Autio, HJ. Sapienza, “Social capital, knowledge acquisition, and knowledge exploitation in young technology-based firms,” *Strategic Management Journal*, 22, 7, pp.587–613, 2001.

Appendix1

Items	SFL
Radical innovation CR=0.836, AVE=0.558	
1. Our new products differ substantially from their predecessors	.798
2. We introduce radical product innovations into the market more frequently than our competitors	.794
3. Our percentage of radical product innovations in the product range in the last 3 years is significantly higher compared to the competition	.775
4. The percentage of total sales from radical product innovations rose in the last 3 years	.756
5. We are well known by our customers for radical product innovations	.674

Integrating Technology Ability CR = 0.899，AVE=0.632	
Integrating Technology Ability CR=0.822	
1. Able to obtain the required technical knowledge for the enterprise from international partners.	.841
2. Able to reduce costs of R & D from international partners.	.797
3. Able to share the risk of R & D from international partners.	.748
4. Able to expand resource availability from international partners.	.747
5. Able to catch the forefront technical knowledge from international partners.	.733
Integrating Suppliers Ability CR=0.837	
1. Enables suppliers to make changes to accommodate the needs of enterprises	.830
2. Enables suppliers to make new technology, raw materials, equipment and spare parts for enterprises	.766
3. Enables suppliers to ensure sufficient supply of raw materials, equipment and spare parts	.761
4. Enables suppliers to ensure high quality of technology, raw materials, equipment, and the parts	.731
5. Enables suppliers to supply the technology, raw materials, equipment, and the parts on time.	.655
Integrating Market Ability CR=0.857	
1. Able to contact with early users through the international partners.	.893
2. Able to open up new markets through the international partners.	.840
3. Able to improve the market competitiveness through the international partners.	.828
4. Able to obtain a new market concept through the international partners.	.760
Embedding Degree CR=0.640, AVE=0.662	
International users or distributors (downstream)	.818
International suppliers of equipment, spare parts, technology (upstream)	.818
Competitors	.806
Embedding Quality CR=0.793, AVE=0,628	
Cooperative enterprises can keep their promise	.841
Cooperation based on the principle of reciprocity, the enterprise will not use the our weaknesses to achieve illegitimate interests	.812
Cooperative enterprises are willing to provide the required information as much as possible	.770
Help each other to solve the problems	.745

Notes: SFL = standardized factor loading; CR = composite reliability; AVE = average variance extract